Two-Stage Packaged Geothermal Heat Pump

Installation & Operating Instructions

Model: (RT-VE*)

Application

- Forced air Geo source installation
- Equipped for optional AUX EL strip heat (controller included)
- Dual Heat – combine this geothermal unit with standby gas or oil furnace
- LMC (Load management control) ready
- Tested to UL Standards 1995 and CSA Standards C22.2

Domestic Water Heater, Desuperheater

Energy Star promotes the desuperheater and it is standard with this series. However, it only efficiently produces hot water if the tank temperature is less than 115° F (46° C). Thus, for proper and efficient application a hot water buffer tank is suggested, see page 17.

Note

- The EZGEO control board has a configuration mode dial switch. This must be correctly set during installation, see EZGEO Controller (HC112) and Field Setup sections.

Drawings: **HC112, NH401, NR402, UAW501, UAW507 NG0001**

DO NOT DESTROY THIS MANUAL. PLEASE READ CAREFULLY AND KEEP IN A SAFE PLACE FOR FUTURE REFERENCE BY A SERVICE TECHNICIAN.

ENERGY STAR

Intertek

AHRI CERTIFIED www.ahridirectory.org Water Source HP ANSI/AHRI/ASHRAE/ISO13256-1

www.northernheatpump.com

Northern Geo LLC
75 West Veum
Appleton, MN 56208
320-297-9100
info@northerngeo.com

Table of Contents

Introduction	1
Product Configurator (NC028)	2
Mechanical Specifications	3
Electrical Data	4
Product Dimensions	5
Installation Requirements	6
Mechanical Installation Overview	7
Mechanical Installation Source Water	8
Flushing and Filling Procedure	10
Antifreeze	11
Converting to Right Hand Return	14
Forced Air Duct System	15
Condensate Drain	15
Desuperheater, Domestic Hot Water	17
Electrical Hookup	19
EZGEO Controller	20
Additional Hookup or Special Equipment Concerns	24
Field Setup or Programming	25
Operation Indicators	28
Power On, Start Up	30
Operational Tips	31
Troubleshooting	34
Preventative Maintenance	38
Accessories/Options	39
Drawings	HC112 NH401 NR402 UAW501 UAW507 NG0001

Introduction

When used and controlled properly, geothermal heat pumps can save hundreds of dollars in heating and cooling costs per year. Northern Heat Pump ***NorthStar Series*** geothermal heat pumps are designed to provide maximum efficiency, comfort, and reliability. Solid and simple electric controls allow for low maintenance and built in safety protection.

This is a prewired package system with the necessary controls for various forced air heating applications. The EZGEO controller has a 4-position mode switch which allows various combinations of dual heat, AUX EL strip heat, load control, etc. See the attached HC112 helps – EZGEO Controller.

The EZGEO controller is loaded with options and features you won't find on other ground source heat pump controls. The utility load control in the EZGEO system properly manages the cold weather heating mode **and** properly controls the air conditioning mode during summer load interrupt. The blower control is designed to allow the blower motor to operate continuously during cooling peak load interrupts.

Moving and Storage
Units should be stored in original packaging in a clean dry area. Store and move units in normal upright position. Do not stack units.

Initial Inspection
Be certain to inspect all cartons and crates as units are received before signing the freight bill. Verify that all items received have no physical damage. Report any damages or shortages on the freight bill. The purchaser is responsible for filing the necessary claims with the carrier. Concealed or hidden damages not discovered until removing packaging must be reported to the carrier within 15 days of receipt.

Unit Location and Mounting
Locate the unit in an indoor area where the ambient temperature will remain above 45°F [8°C]. Northern Heat Pump provides 3 removable panels for ease of servicing; front (2), right and left bottom. This unit is zero clearance rated; however, allow enough room to remove panels for service and maintenance. We suggest setting the unit on a sound vibration pad, see accessories price sheet, R-PAD-2735-1-**. Water supply should **not** be hard plumbed directly with copper pipe as this could transfer any vibration to living space.

Please read and understand conditions associated with proper installation, unauthorized changes, and POWER ON procedures.

Warranty Statement
See the last page of this manual for detailed limited warranty coverage explanation.

Safety Considerations

⚠ WARNING

BEFORE PERFORMING SERVICE OR MAINTENANCE OPERATIONS ON A SYSTEM, TURN OFF MAIN POWER SWITCHES TO THE INDOOR UNIT. IF APPLICABLE, TURN OFF THE ACCESSORY HEATER POWER SWITCH. ELECTRICAL SHOCK COULD CAUSE PERSONAL INJURY.

Installing and servicing heating and air conditioning equipment can be hazardous due to system pressure and electrical components. Only trained and qualified service personnel should install, repair or service heating and air conditioning equipment. Untrained personnel can perform the basic maintenance functions of cleaning coils and cleaning and replacing filters. All other operations should be performed by trained service personnel. When working on heating and air conditioning equipment, observe precautions in the literature, tags and labels attached to the unit and other safety precautions that may apply, such as the following safety measures:

- Follow all safety codes.
- Wear safety glasses and work gloves.
- Use a quenching cloth for brazing operations.
- Have a fire extinguisher available for all brazing operations.

Northern Heat Pump Configurator

R	A	-	V	E	-	0	2	8	-	1	-	C	L	D	X	1	-	X	X	-	U	S
1	2		3	4		5	6	7		8		9	10	11	12	13		14	15		16	17

Model Number Digits

RA-VE-028-1-CLDX1-XX-US

Geo Source (1)

Unit Type (2)
A = Single Stage
D = Dual Compressor
T = Two Stage

Unit Style (3)
S = Split
V = Vertical
W = Hydronic

Refrigerant (4)
E = R-410A

Nominal BTU (5, 6, 7)
041 (Single Stage) 3-ton
053 (Single Stage) 4-ton
061 (Single Stage) 5-ton
073 (Single Stage) 6-ton

026 (Two Stage) 2-ton
033 (Two Stage) 2.5-ton
040 (Two Stage) 3-ton
045 (Two Stage) 3.5-ton
052 (Two Stage) 4-ton
062 (Two Stage) 5-ton

030 (Hydronic) 2.5-ton
036 (Hydronic) 3-ton
050 (Hydronic) 4-ton
060 (Hydronic) 5-ton
072 (Hydronic) 6-ton

096 (Hydronic Dual) 8-ton
120 (Hydronic Dual) 10-ton
144 (Hydronic Dual) 12-ton

Country of Origin (16, 17)
US = United States
CA = Canada

Auxiliary kW Option* (14, 15)
05 = 4.8 kW
10 = 9.6 kW
15 = 14.4 kW
20 = 19.2 kW
XX = None
*Can be factory or field installed

Vintage (13)
1

Miscellaneous Kits (12)
A = Soft Start Kit (Installed)
X = None

Desuperheater Option (11)
D = Desuperheater w/ Factory Installed Pump
X = None

Configuration Option (10)
L = Left Return (Standard)*
R = Right Return
C = Split Air Coil
X = N/A or No Split Air Coil
*Left return can be field converted to right return

Heat Exchanger Option (9)
C = Copper Coax
N = Cupronickel Coax
M = Copper (Load) & Cupronickel (Source) Coax
S = Stainless Brazed Plate (RD-WE only)

Voltage Option (8)
1 = 208/230V, 1 Ph
2 = 208/230V, 3 Ph
3 = 460/480V, 3 Ph

Mechanical Specifications – R410A Two-Stage Compressor

MODEL	RT-VE-026 (2 ton)	RT-VE-040 (3 ton)	RT-VE-045 (3.5 ton)	RT-VE-052 (4 ton)	RT-VE-062 (5 ton)
Coax & Piping Water Volume – gal	.43	.65	.77	1.1	1.1
Source Temperature °F (min/max)	20°/120°	20°/120°	20°/120°	20°/120°	20°/120°
Nominal source differential* ° F (H/C)	3/12°	9/11°	10/11°	6/11°	6/10°
Factory Charge R410A	3 lbs. 3 oz.	4 lbs. 8 oz.	4 lbs. 8 oz.	6 lbs. 4 oz.	6 lbs. 4 oz.
Static Pressure – Nominal	0.3	0.3	0.3	0.3	0.3
Static Pressure – Design	0.5	0.5	0.5	0.5	0.5
Air Filter	7/8 X 21 7/8 X 27 1/2	7/8 X 28 7/8 X 27 1/2	7/8 X 28 7/8 X 27 1/2	7/8 X 27 1/2 X 37 7/8	7/8 X 27 1/2 X 37 7/8
Weight– Packaged (lbs)	440	480	490	503	530

HEAT EXCHANGER PRESSURE DROP TABLE

Water-to-Air (Source Side, Pure Water @ 68° F)								
Model	**GPM**	**PSID**	**Model**	**GPM**	**PSID**	**Model**	**GPM**	**PSID**
2-ton	4	1.2 (ref)	3-ton	6	1.8 (ref)	4-ton	8	1.3
	6	2.7 (ref)		9	2.4 (ref)		12	2.5
	8	3.6 (ref)		12	4.3 (ref)		16	4.0
	10	5.6 (ref)		15	6.7 (ref)		20	5.8
			3.5-ton	7	2.5	5-ton	10	1.9
				10.5	4.5		15	3.6
				14	7.0		20	5.8
				17	9.5		25	8.5

PRESSURE DROP MULTIPLIERS

	Freeze Point (° F)	20° F	25° F	30° F	35° F	40° F
Pure Water Multiplier	32.0	1.00	1.00	1.00	1.00	1.00
Methanol 12.5%* Multiplier	16.2	–	1.25	1.21	1.18	1.15
Propylene Glycol 20%* Multiplier	18.4	1.39	1.35	1.31	1.28	1.24
Ethanol 20%* Multiplier	18.1	1.56	1.47	1.42	1.36	1.31

*By volume Feet of Head = PSI x 2.31

HEATING – ISO 13256-1 SPECIFICATION – ENERGY STAR

Model	Stage	Source GPM	GWHP – Ground Water				GLHP – Ground Loop			
			50° F		68° F		32° F/41° F		68° F	
			Capacity Btu/h	**Blower CFM**	**Temp Rise**	**COP**	**Capacity Btu/h**	**Blower CFM**	**Temp Rise**	**COP**
RT-VE-026	FL	10	30300	850	32	4.01	24100	850	26	3.66
RT-VE-026	PL	10	23000	725	29	4.20	19900	725	26	3.84
RT-VE-040	FL	9	41800	1200	32	4.05	32800	1200	27	3.70
RT-VE-040	PL	9	29600	1000	28	4.19	27000	1000	26	3.85
RT-VE-045	FL	10.5	44600	1312	32	4.07	35600	1312	26	3.59
RT-VE-045	PL	10.5	31500	1100	27	4.21	28400	1100	25	3.76
RT-VE-052	FL	12	55700	1500	34	4.06	44400	1500	29	3.55
RT-VE-052	PL	12	37300	1200	29	4.20	33400	1200	27	3.67
RT-VE-062	FL	15	66800	1875	33	4.02	54500	1875	28	3.55
RT-VE-062	PL	15	49100	1480	31	4.20	44500	1480	29	3.66

COOLING – ISO 13256-1 SPECIFICATION – ENERGY STAR

Model	Stage	Source GPM	GWHP – Ground Water				GLHP – Ground Loop			
			59° F		80.6° F		77° F/68° F		80.6° F	
			Capacity Btu/h	**Blower CFM**	**Temp Drop**	**EER**	**Capacity Btu/h**	**Blower CFM**	**Temp Drop**	**EER**
RT-VE-026	FL	10	36500	950	22	19.7	32700	950	20	16.1
RT-VE-026	PL	10	28400	825	21	24.1	26400	825	22	19.8
RT-VE-040	FL	9	47000	1250	23	20.1	43200	1250	22	15.9
RT-VE-040	PL	9	35100	1050	22	23.4	30700	1050	21	19.3
RT-VE-045	FL	10.5	49300	1400	22	19.3	47600	1400	21	14.9
RT-VE-045	PL	10.5	36400	1150	21	24.1	34600	1150	20	19.9
RT-VE-052	FL	12	64200	1600	23	19.1	58300	1600	22	15.0
RT-VE-052	PL	12	47700	1275	22	23.7	46100	1275	22	19.2
RT-VE-062	FL	15	71500	2000	23	18.9	66100	2000	23	14.7
RT-VE-062	PL	15	55500	1650	21	23.3	50100	1650	22	19.6

1. Capacities are based on temperatures shown in heading, source is left group return air is right group.
2. Stated Btu/h is the ISO 13256-1 formula adjusted, actual HP supply energy delivered is 2% greater.
3. Temp rise is based on sensible only.
4. All ratings based upon operation at lower voltage o dual voltage rated models.
5. Ground Loop Heat Pump ratings based on 15% antifreeze solution.

Electrical Data – Single Phase

Model	Voltage	Compressor		Blower	Desup. Pump	Loop Pump (Ext)	Total	Min.	Max. Fuse/ HACR
	(60 Hz)	RLA	LRA	FLA	FLA	FLA	FLA	Ampac.	
026	208/230-1	13.1	73	4.5	.15	4.4	22.1	25.4	30
040	208/230-1	17.9	96	6.1	.15	4.4	28.6	33.0	50
045	208/230-1	21.2	104	6.1	.15	4.4	31.9	37.2	50
052	208/230-1	27.1	152.9	6.1	.15	4.4	37.8	44.4	70
062	208/230-1	29.7	179.2	7.3	.15	4.4	41.6	49.0	70

Electrical Data – Three-Phase

Model	Voltage	Compressor		Blower	Desup. Pump	Loop Pump (Ext)	Total	Min.	Max. Fuse/ HACR
	(60 Hz)	RLA	LRA	FLA	FLA	FLA	FLA	Ampac.	
040	200/230-3	14.2	88	6.1	.15	4.4	24.9	28.3	40
045	200/230-3	14.0	93.1	6.1	.15	4.4	24.7	25.8	40
052	200/230-3	16.5	110.0	6.1	.15	4.4	27.2	31.1	40
062	200/230-3	17.6	136.0	6.1	.15	4.4	28.3	32.5	50

Mechanical Dimensions

	Cabinet Dimensions			Supply Connections				Return Connections		
	A (Height)	B (Width)	C (Depth)	U	V	W	X	Y	Z	AA
RT-VE-026 RT-VE-033	60 5/8"	28 5/8"	34 7/8"	1 1/8"	8 3/8"	18"	18"	2"	20 7/8"	25 7/8"
RT-VE-040 RA-VE-041 RT-VE-045									27 7/8"	
RT-VE-052 RA-VE-053 RA-VE-061 RT-VE-062									36 7/8"	

Electrical Connections

H	I	J	K	L	M	N	O	P	Q	R	S	T
25 3/4"	30 3/4"	28 1/4"	28 1/8"	54 7/8"	56 5/8"	1 1/2"	54 3/4"	33 3/8"	31 5/8"	3 1/4"	51 1/2"	3 1/4"
Ø 1 1/8" X Ø 7/8" Double Knockout					Ø 1 3/4" X Ø 1 3/8" Double Knockout				Ø 1 1/8" X Ø 7/8" Double Knockout			

Water Connections

Source		Drain	Desuperheater	
In	Out		In	Out
D	E	F	G	
4 1/4"	6 1/8"	15 3/4"	18 1/2"	
Connection Size 1" FPT		3/4" FPT	Connection Size 1/2" FPT	

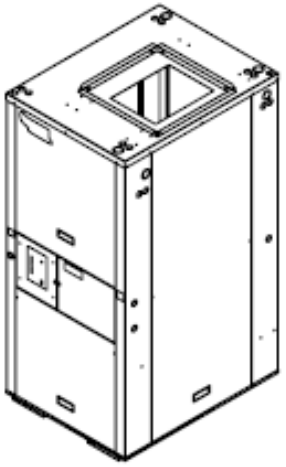

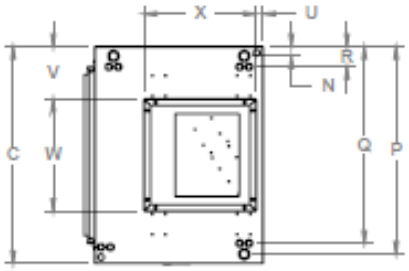

ART-270-00_07

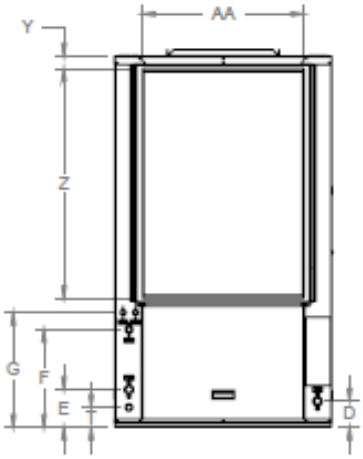

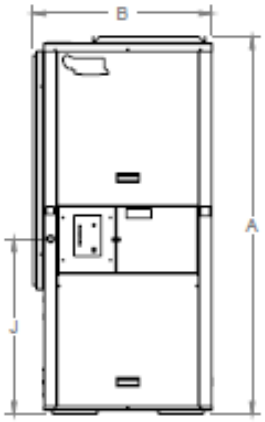

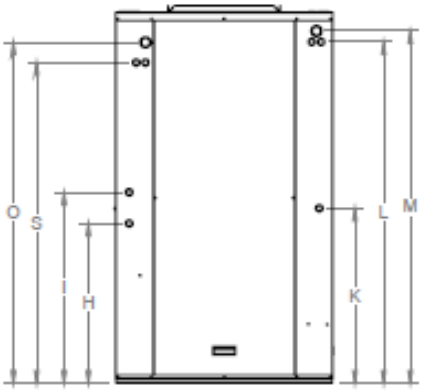

Installation Requirements

1. All installation work must be performed by trained, qualified contractors or technicians. Northern Heat Pump, sponsors installation and service schools to assist the installer. **Visit our Website at www.northernheatpump.com for upcoming service schools.**

⚠ WARNING

ALL ELECTRICAL WIRING MUST BE IN ACCORDANCE WITH NATIONAL ELECTRIC CODE AND LOCAL ELECTRIC CODES, ORDINANCES, AND REGULATIONS.

⚠ WARNING

OBSERVE ELECTRIC POLARITY AND WIRING COLORS. FAILURE TO OBSERVE COULD CAUSE ELECTRIC SHOCK AND/OR DAMAGE TO THE EQUIPMENT.

⚠ CAUTION

This unit can only be used for its intended design as described in this manual. Any internal wiring changes, modifications to the circuit board, modifications or bypass of any controls, or installation practices not according to the details of this manual will void the product warranty, the safety certification label, and manufacturer product liability. Northern Heat Pump, cannot be held responsible for field modifications, incorrect installations, and conditions which may bypass or compromise the built-in safety features and controls.

2. If this is a Dual Heat system, this product relates only to the addition to the furnace ducting system external to the gas or oil force air furnace. The owner/installer assumes all responsibility and/or liability associated with any needed installation of the gas/oil furnace, fuel system, flue, chimney, etc. Any instructions or comments made within this manual (or factory phone assistance) relating to the gas/oil furnace are provided as comments of assistance and "helps" only.

⚠ CAUTION

This unit shall not be operated (either heating section or blower) until the interior of the structure is completed and cleaned. This also means all duct work must be complete with filter, etc. Manufacturer's warranty is void if this unit is operated during structure construction.

⚠ CAUTION

Hazards or unsafe practices could result in property damage, product damage, severe personal injury and/or death.

3. All removed or discharged refrigerant must be recovered. Local and federal statutes are to be observed. Should a compressor need replacing, the compressor oil is to remain with the compressor. Refrigerant lines on the compressor must be sealed.

4. Remember, safety is the installer's responsibility and the installer must know this product well enough to instruct the end user on its safe use.

   At Northern Heat Pump, the safety of the installer and the end user is of highest priority. Remember, safety is the installer's responsibility and the installer must know this product well enough to instruct the end user on its safe use. Professional installers should be trained and experienced in the areas of handling electrical components, sheet metal products, and material handling processes. Use them.

Mechanical Installation Overview

This ***NorthStar Series*** unit cannot correct airflow problems inherent within the duct work system. The following items should be carefully considered and properly followed for all installations:

Examination of the existing forced air furnace – Prior to starting this installation, examine the total furnace system and make necessary comments or recommendations to the homeowner. Remember, if a marginal condition exists within the existing duct work system, the installation of a geothermal heat pump will not cure PRE-EXISTING conditions. Consider such items as adequate cold air return and adequate supply duct and room register (1 register per 100 CFM) etc.

Heating capacity – Size the geothermal heat pump according to the normal heating requirements as the building exists today. Do not necessarily match to the existing furnace nameplate because it may be oversized. Do not oversize the geothermal heat pump.

Flexible duct connections – Flex duct connections are required for both the supply and return duct connections and metal duct systems.

Other plenum equipment – Auxiliary equipment such as humidifiers, zone plenum dampers, etc., located within the plenum which may cause a non-uniform airflow issues may have to be removed if they cause to great reduction to system airflow. Zone dampers within the trunk line at least 12" (30.5 cm) from the coil typically pose no problems. When horizontal zone dampers are involved, perform all check-out functions with smallest zone open first.

> Comment – zone dampers cause back pressure on the blower and overall reduced airflow. Reduced airflow can cause the geothermal unit to perform poorly or in some cases cause icing or freeze ups in the geo loop or air coil.

Insufficient cold air return capacity – Installation experience indicates this is a major concern. In fact, it could represent a problem in as many as 60% of the installations, especially if there is a requirement to increase airflow when the existing cold air return capacity is already undersized or restricted. Check the static pressure within the return cabinet or the suction at the filter cabinet door. Do not assume because there is a register on the wall, the hole behind the register or the passageways are equal to this register. Sharp offsets and transitions in the cold air return system often cause severe restrictions. Expect to add additional registers or a relief register in the main cold air return duct.

Closed Loop Applications – Closed loop system re-circulates the same water/antifreeze solution through a closed system of underground high-density polyethylene pipe. As the solution passes through the pipe it collects heat (in the heating mode) that is being transferred from the relatively warm surrounding soil through the pipe and into the relatively cold solution. The solution is circulated back to the heat pump that extracts its heat and then returns to the ground to absorb more heat from the earth. Earth loops must be sized properly for each particular geographic area and individual capacity requirements.

Horizontal Closed Loop

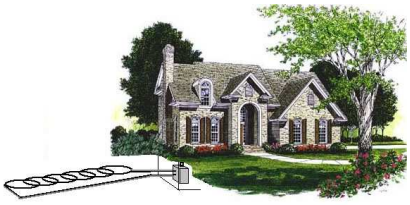

Figure 1

The ***NorthStar Series*** heat pumps are designed to operate on either **vertical or horizontal closed loop applications.** (Figures 1 & 2) Vertical loops are typically installed with a well drilling rig up to 200 feet (61 meters) deep or more. Horizontal systems are typically installed with excavating or trenching equipment approximately six to eight feet (1.8 – 2.4 meters) deep, depending on geographic location and length of pipe used.

Vertical Closed Loop

Lake or Pond Loops – Closed loop systems may also be used in lakes or rivers to supply a heat source to the heat pump. Typically a loop consisting of geothermal pipe can be designed and placed in an area not much deeper than 15ft (4.6 meters) with some water currents present. In any lake or pond, municipal and area codes must be observed in regards to a lake or pond loop. The use of an environmentally friendly loop fluid like ethanol should be considered in the event damage should ever occur to the loop. Consult an IGSHPA or CGC certified installer for proper lake or pond loop design.

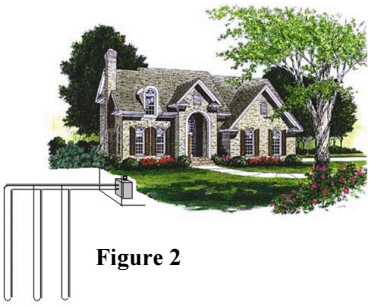

Figure 2

Mechanical Installation Source Water

⚠ WARNING

LOOP DESIGN IS EXTREMELY IMPORTANT FOR PROPER HEAT PUMP OPERATION. INCORRECT LOOP DESIGN WILL REDUCE HEAT PUMP EFFICIENCY, CAUSE POOR PERFORMANCE OR MAY RENDER THE SYSTEM UNUSABLE. CONTACT AN IGSHPA OR CGC CERTIFIED GEOTHERMAL LOOP CONTRACTOR FOR PROPER INSTALLATIONS.

Water Connections General

The following pages outline typical piping arrangements for the most common source water connection options, as well as flushing and filling procedures and antifreeze requirements for closed loop systems. Do **not** connect copper piping directly to the source water connection points on this unit. A section of flexible piping is recommended to reduce and isolate vibrations transmitting from the compressor into other parts of the system.

Once closed loops are completed, they must be pressure tested to at least 60 PSI to ensure integrity. Once pressure is tested, loop must be purged of all foreign debris and filled with fluid. All air must be removed at this time by flushing the system. (Table 2) shows approximate fluid volumes.

P/T Adapter

Figure 3

Pressure/Temperature (P/T) plugs – Should be installed in the adaptor elbow on the entering and leaving water line of the heat pump on a closed system. (Figure 3) A thermometer can be inserted into the P/T ports to check entering and leaving water temperatures. A pressure gauge can also be inserted into these P/T ports to determine the pressure differential between the entering and leaving water. This pressure differential can then be compared to the engineering specifications data to determine the flow rate of the system.

Flow Center – if selecting a **non-pressurized** closed loop design, a flow center is required. A flow center is a key component for installation ease and long-term reliability.

A **Flow Meter** is an important part of the system. It provides a visual indicator of loop flow in GPM.
A flow meter can be installed on either side of the pump pack, but must be installed per manufacture recommendations so it reads accurately.

Pressurized Loops do not require an air separator. They require purge and fill ports between the loop manifold valves and the insulated pump pack. After purging a pressurized loop, it should maintain 45 to 60 psi static pressure. The Geothermal Loop Pipe stretches under pressure so may need to be pressurized above the desired pressure several times to achieve the recommended static pressure. Pressurized loops must maintain enough static pressure to compensate for the expansion and contraction of the loop pipe and fluid.

Loop Pump Selection – Select a loop circulation pump based upon the GPM required and total system pressure drop. See specification, page 3. Geo heat pump Btu/h capacity and efficiency are directly related to the GPM flow through the unit.

Vibration pad – suggest setting the unit on a sound vibration pad, available from most distributors or accessories price sheet – R-PAD-2735-1-**.

Water quality – models with standard copper heat exchanger coils require the installer to evaluate water quality and meet minimum water properties.

- pH/calcium hardness — pH < 7.5 and Ca harness < 100 PPM
- Iron fouling — < 0.2 PPM (Ferrous)
  < 0.5 PPM of oxygen
- Hydrogen sulfide (H_2S) — < 0.5 PPM
- Chloride levels — < 20 PPM
- Erosion/clogging — < 10 PPM, particles
- Filter, if required — < 800 micron size

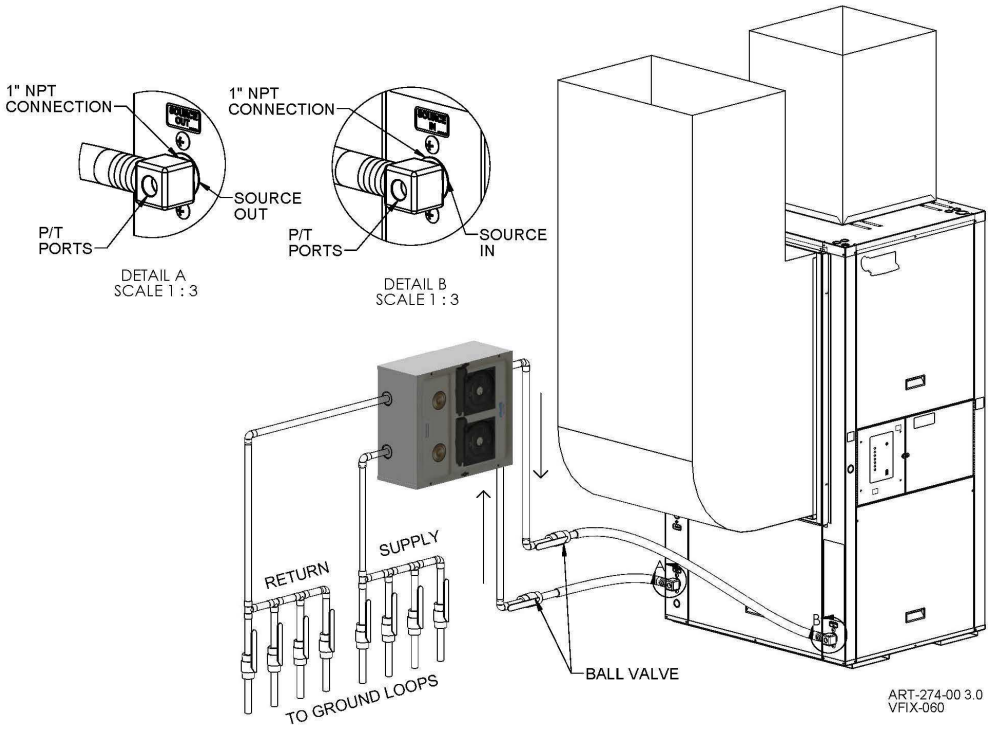

Figure 4 – Pressurized Closed Loop with Flow Center – Typical piping arrangement.

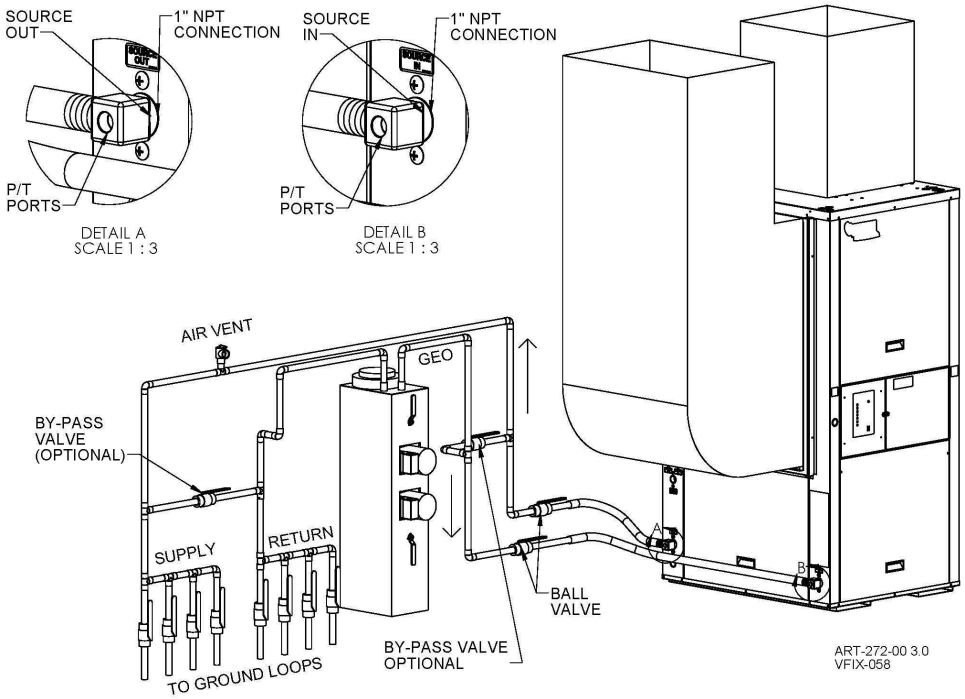

Figure 5 – Non-Pressurized Closed Loop with Flow Center – Typical piping diagram.

Flushing and Filling the System Using 3-Way Valves

Step 1
Use water and a high volume head circulator pump to flush air and debris and to fill the loop system.

- Refer to recommendations provided by IGSHPA or CGC when choosing a pump for the flushing process.
- It is recommended that pump suction be from the bottom of a large volume container. Use a suction line strainer to prevent debris discharged into the container from being recycled to the system.

Step 2
Pump water into the system by connecting the pump discharge hose to one (not both) of the 1.00" NPT water connections located on the sides of the module. Connect a return hose to the opposite side of the module to discharge debris and air as water is added to the loop.

Step 3
Rotate the module valves as shown in step 3 diagram:

Step 4
Start the pump. Add anti-freeze and water to the container as needed so that no air enters the system. This will push any air out of the loop. If flushing assembly is equipped with valves to reverse flow direction, do so occasionally to help remove trapped air. When bubbles cease in the return hose container, the earth loop has been completely flushed.

Step 5
Flush the heat pump. Rotate the valves as shown in step 5 diagram while the pump is running. Flush the heat pump using the same procedure as used to flush the earth loop.

Pressurizing the System (does not apply to Figure 5)

Step 6
After flushing and filling the system, rotate the module valve discharging into the flush container as shown in step 6A diagram to pressurize the loop. Then turn the valves as in step 6B.

Step 7
Turn off the flush cart pump. The system should remain pressurized. Release excess pressure by rotating either module valve to allow a small amount of water to pass through and out of the system and into the container. Some initial loss of pressure can be expected and is due to the expansion of the earth loop pipe under pressure. The pressure will stabilize if the system has no leaks.

Step 8
Flushing, filling and pressurization should be complete. Start the loop pump module circulators.

Step 9
Troubleshoot. If for some reason the circulators are not operating, power off and diagnose the problem.

Step 10
Using a single water pressure gauge, measure the pressure drop at the pressure/temperature plugs across the heat pump heat exchanger. Compare the measurement with the flow

Step 3

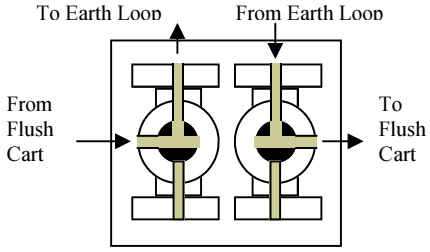

Step 5

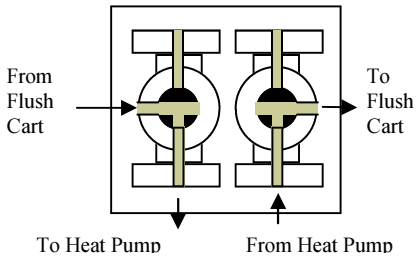

Step 6A

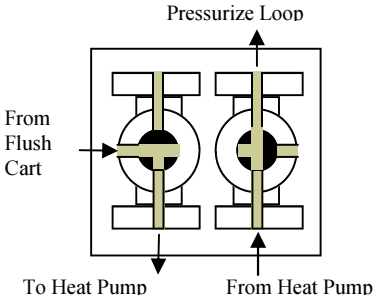

Step 6B

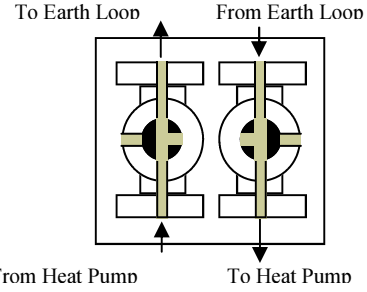

versus the pressure drop table (Table#3) and determine the actual flow rate. If the flow rate is low, recheck the selection of the loop pump module model for sufficient capacity. If the model is correct, there is likely trapped air or a restriction in the flow circuit.
System pressure should increase rapidly as the flush pump works to force more water into the system. Additional flushing of the loop is needed if the water level in the loop falls. This shows that there is air in the system. System operating pressures should be between 10 to 40 PSI.

Antifreeze

DO NOT mix more than 25% propylene glycol with water to achieve a lower than 15°F [-9°C] freeze protection. (See Table 3) A more concentrated mixture cannot be pumped through the earth loop at low temperatures. Lack of antifreeze will cause unit shutdown problems during cold weather operation (longest unit run time) when the loop temperatures fall below the freeze protection of the antifreeze. Flow rate requirements for closed loop solutions are higher than open loop systems because water temperatures supplied to the heat pump are generally lower. **Typically** 2.0 to 3.0 gallons per minute (GPM) per ton are required for proper operation of the heat pump and the earth coupled heat exchanger.

Table 2 – Approximate Fluid Volume (gal) per 100ft

Pipe	Size	Volume
Polyethylene	¾" IPS SDR 11	2.8
	1" IPS SDR 11	4.5
	1-1/4" IPS SDR 11	8.0
	1-1/2" IPS SDR 11	10.9
	2" IPS SDR 11	18.0
Rubber Hose	1"	3.9
Copper	1"	4.1
	1.25"	6.4
	1.5"	9.2

Table 3 – Antifreeze Percentages by Volume*

Minimum Temperature for Freeze Protection					
	10°F	16°F	17°F	21°F	25°F
Type	-12°C	-9°C	-8°C	-6°C	-4°C
Methanol	25%	21%	18%	16%	10%
Propylene Glycol	38%	30%	25%	22%	15%
Ethanol	22%	20%	18%	14%	10%

*Reference information only, see product manufacturer specification for percentage.

⚠ WARNING

DO NOT USE CALCIUM AS ANTI-FREEZE. FOLLOW CGC/IGSHPA RECOMMENDATIONS FOR THE APPROPRIATE TYPE AND AMOUNT OF ANTI-FREEZE.

⚠ WARNING

PREVENTING FREEZE-UP IS INSTALLER/USER RESPONSIBILITY. LEAKING HEAT EXCHANGER OR PIPING (EXTERNAL OR INTERNAL WITHIN THE REFRIGERANT/ COMPRESSOR) ARE NOT COVERED BY WARRANTY.

Open Loop Well to Well – An open system gets its name from the open discharge of water after it has been used by the heat pump. A well must be available that can supply all of the water requirements of the heat pump along with any other water requirements drawing off that same well. The well must be capable of supplying the heat pumps required flow rated for up to 24 hours per day for the coldest winter day.

Figure 6 shows the necessary components for water piping of an open system. First a bladder type pressure tank with a "draw down" of at least 1-1/2 to 2 times the well pump capacity must be installed on the supply side of the heat pump to prevent short cycling the well pump. Shut off valves and boiler drains on the entering and leaving water lines are necessary for future maintenance. A screen strainer is placed on the supply line with a mesh size of 40 to 60 and enough surface area to allow for particle buildup between cleanings. Pressure temperature (P/T) plugs are placed in the supply and discharge lines so that thermometers or pressure gauges can be inserted into the water stream. On the well water discharge side of the heat pump a flow control/shut off valve must be mounted to regulate the maximum water flow through the unit. Remove handle to prevent accidental change of flow.

A solenoid valve is then installed and wired to the compressor contactor terminal on the heat pump. This valve will open when the unit is running and close when the unit stops. A visual flow meter is then installed to allow visual inspection of the flow requirements. The flow meter can also be useful in determining when maintenance is required. Schedule 40 PVC piping, copper tubing, polyethylene or rubber hose can be used for supply and discharge water lines. Limit rubber hose to 10ft. (305 cm) to prevent excessive pressure drop. Make sure line sizes are large enough to supply the required flow with a reasonable pressure drop (generally 1.00" diameter). Water discharge is generally made to a drain field, stream, pond, surface discharge, tile line, or storm sewer.

Solenoid Valve Wiring (for Open Loop Systems)

Locate the compressor contactor in the right-hand high-voltage side of the control panel. Wire the solenoid valve as shown in this diagram.

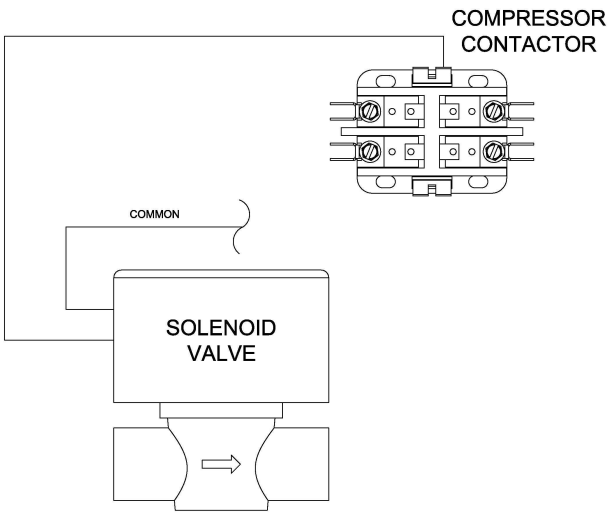

⚠ CAUTION

Using a drain field requires soil conditions and adequate sizing to assure rapid percolation or the required flow rates will not be achieved. Consult local codes and ordinances to assure compliance. Do not discharge water to a septic system. The heat pump should never be operated with flow rates (GPM) less than specified. Operation of the unit with less than required flow rate or no flow may result in freezing water in the water to refrigerant heat exchanger. This will cause the unit to shut down on low-pressure lockout. If the unit locks out, verify that the unit has the required flow and reset the unit by shutting off power to the unit for one minute. Do not continually reset the unit; if the unit locks out more than once call your service professional. Continued reset of the unit can freeze water inside the water coil to the point of rupturing the water coil (Northern Heat Pump does not warranty frozen coils).

Figure 6: **Open Loop/Well** – Typical piping diagram.

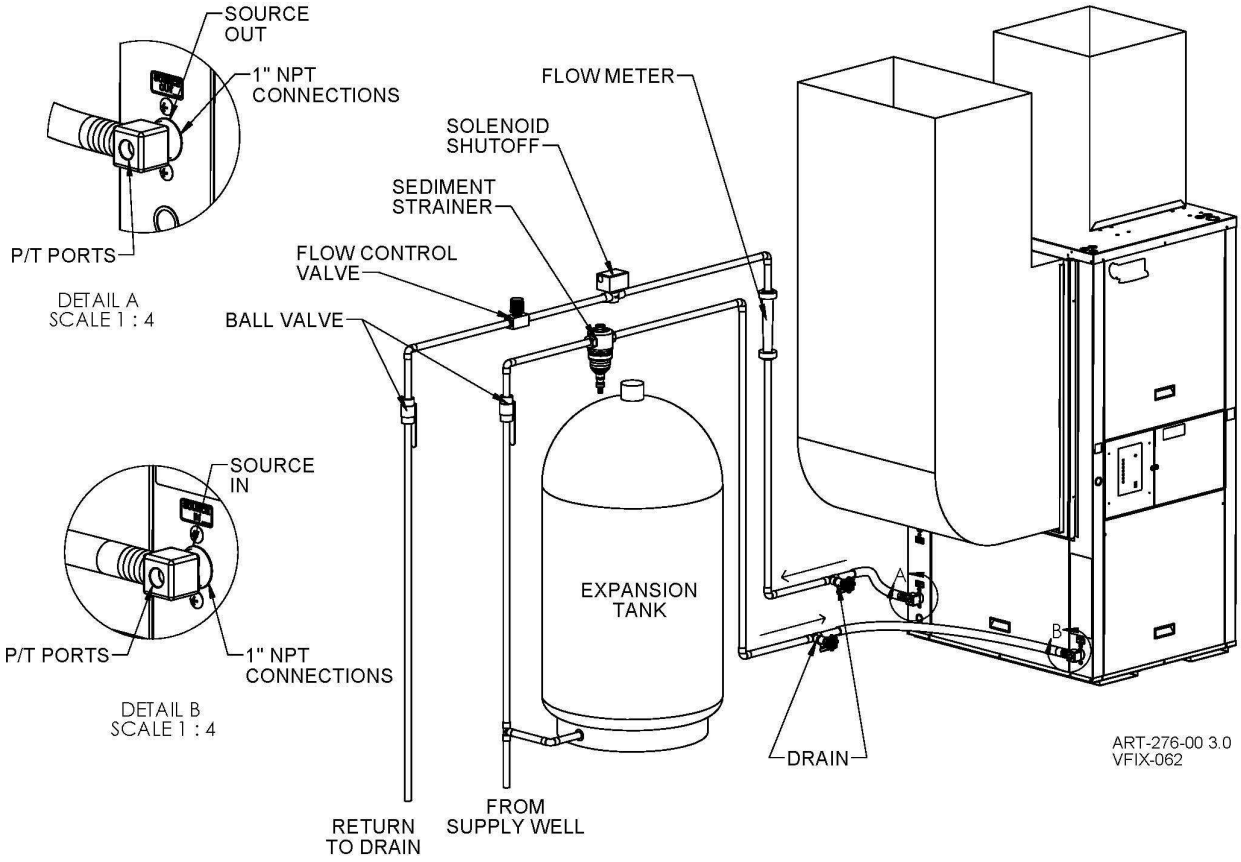

Open Loop Freeze Protection Switch – Heat pump installations on open loop systems, using a non-antifreeze protected water source during the heating mode require the use of a water coil freeze protection switch. If the water supply to the heat pump is interrupted for any reason, continued operation of the compressor will cause the water remaining in the water-to-refrigerant heat exchanger to freeze and rupture. The freeze protection switch will shut the unit down before freezing can occur and protect the heat pump against flow loss and damage.

Option – 39° F (3.9° C) pipe clamp-on, part number 6047. Connect in series with low limit.

Water Coils in Open Systems– Water quality is a major concern for open systems. Problems can occur from scaling, particle buildup, suspended solids, corrosion, pH levels outside the 7-9 ranges, or biological growth. If poor water quality is known to exist in your area a **cupronickel** water coil may be required when ordering the system, or installing a closed loop system may be the best alternative. Water coil cleaning on an open loop system may be necessary on a regular basis.

Converting to Right Hand Return

One of the unique features of your NorthStar Series Heat Pump is the ability to quickly and easily convert the unit from the factory-shipped left-hand return air configuration to a configuration where return air enters the unit from the right-hand side. This is accomplished by moving the access doors and EZGEO control box from the front of the cabinet to the rear of the cabinet and rotating the heat pump 180°.

1. First, make certain that power is disconnected from the heat pump and remove the front, rear, and side panels opposite of the air coil and filter.
2. Disconnect the two blower motor wire harnesses at the blower motor.
3. Using a Phillips screwdriver, remove the control box and hinged access doors. The attached wiring harnesses are sufficiently long enough to allow for the relocation of the control box and door without rewiring these components. Be sure the refrigerant manifold distribution lines do not rest against the u-bends of the coil or the relocated control box.
4. Relocate and secure the control box and doors on the opposite side of the cabinet.
5. If you are not installing electric strip heat reattach the blower motor cables, front, rear and side panels. Your Northern Heat Pump has now been converted to right-hand return.
6. If you are installing an optional Auxiliary Electric Heat unit (model KN-XX-X) observe the steps below.

   Step #1 Remove (4) blower retaining screws and the retaining bracket keeping the blower from sliding. Remove blower assembly from the cabinet.

   Step #2 Remove the electrical box and heating element/s from the electric heater's plenum. See Auxiliary Strip Heat Installation Instructions.

   Step #3 Invert the heater's electrical box and reinstall in the heater's plenum. This will keep the strip heat elements in the blower's air stream.

   Step #4 Install the electric strip heater to the blower with the electrical box opposite the blower motor, and secure assembly with sheet metal screws through the holes provided.

   Step #5 Install the electric strip heat/ blower assembly from the new back of the cabinet, securing the assembly to the cabinet with the screws removed during blower removal.

   Step #6 Finish the installation as described in the electric strip heat installation instructions.

   Step #7 Route and secure the electric strip heat low voltage control wires so they do not come in contact with the refrigerant manifold distribution line.
7. Reattach the blower motor cables, front, rear and side panels. Your Northern Heat Pump has now been converted to right-hand return.

Forced Air Duct System

Metal ductwork should be used, and flexible connectors are required for supply and return air duct connections. All NHP vertical units have flanges for connecting your supply plenum and return ductwork.

If the duct system is installed in an uninsulated space, the metal ductwork should be insulated on the outside to prevent heat loss, absorb noise, and prevent condensation during cooling.

If the NHP vertical is connected to existing ductwork, the ductwork must have the capacity to handle the air volume required to unload the heat pump. Undersized ductwork will cause noisy operation due to high air velocity, and poor operating efficiencies. Check the Duct Sizing Chart provided.

The NHP heat pumps use a variable speed ECM blower motor. The controller determines the speed of the motor based on mode and operation sequence.

The blower will not operate properly if ductwork is not attached. The ductwork provides static pressure to give the blower motor a load to work against. All blower compartment covers must be in place for the heat pump to operate correctly.

See ECM Blower section.

Condensate Drain

In the cooling season, condensation is collected in a drip pan and exits the heat pump through the labeled hole outfitted with a ¾" NPT fitting.

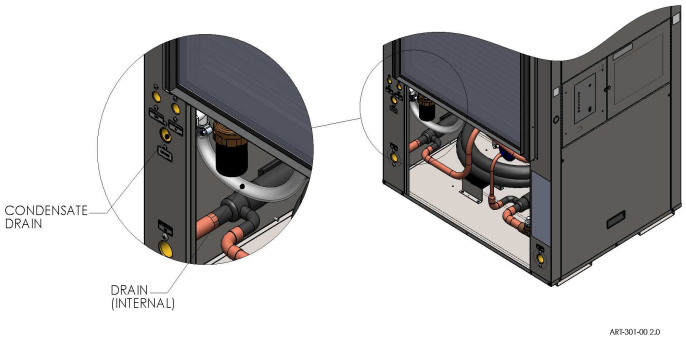

The condensation drain is trapped internally, so generally, no external p-trap is required. A drain vent in the condensate line is required to ensure proper water flow. Terminate the condensation line into a nearby floor drain. If a floor drain is not nearby, a condensate drain pump may be used.

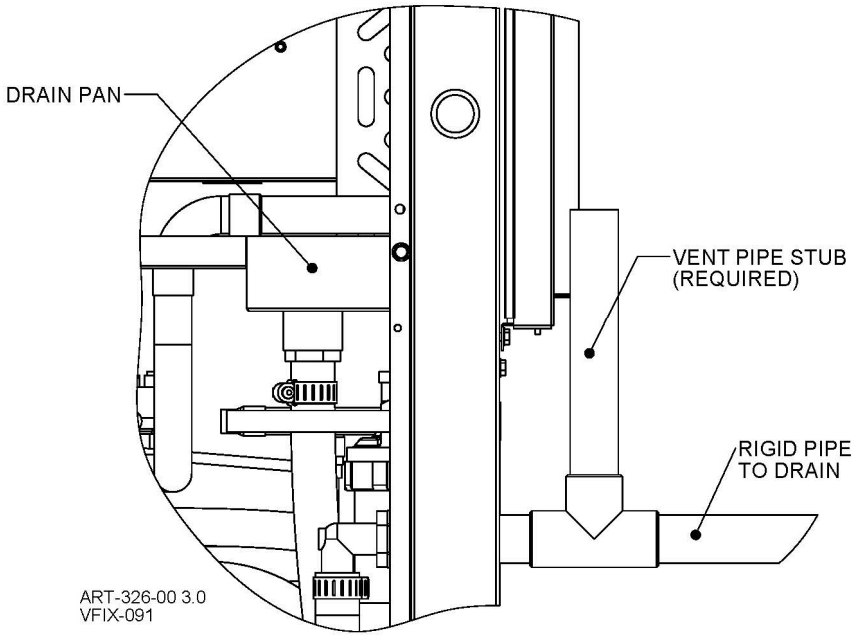

Built-in Electric Strip Heat (AUX EL)

Electric Resistance Heat (optional) –NHP NorthStar Series heat pumps may be ordered with optional electric resistance heat. This feature is installed for various reasons. Most commonly, particularly in northern climates where extremely low temperatures are found, geothermal heat pumps are often intentionally undersized for the coldest days of the year. In situations where the heat pump is undersized, an Electro Industries KN series auxiliary electric heating unit (AUX EL) can be built into the heat pump to meet your additional heating demands during these extremely cold days. Additionally, the AUX EL feature can be utilized for emergency heat if your heat pump should malfunction for any reason.

Although these units utilize 100% efficient electric energy, AUX EL can never approach the energy efficiency of your NHP geothermal heat pump alone. For this reason, your NHP Northstar Series heat pump will attempt to utilize geothermal heating as much as possible. When heating demands reach a level where geothermal heating cannot "keep up", the exclusive NHP EZGEO control will add in just enough resistance heating to meet your heating demands. Here, the duct temperature target point can be adjusted to the preference of the homeowner. This will be discussed later in this manual.

If your NHP heat pump did not come from the factory with AUX EL installed, AUX EL kits in various sizes are available from NHP. The addition of one of these kits should only be performed by trained professionals who are familiar with this product.

Not all of the AUX EL units can be paired with every NHP heat pump. Please refer to this chart to determine which resistance heat unit can be used with your heat pump.

NHP Models	Nominal Ton	**Available AUX EL Models**			
		KN-05-1* 5kw	KN-10-** 10kw	KN-15-1* 15kw	KN-20-1* 20kw
R*-VE-02*	2	OK	OK		
R*-VE-03*	2.5	OK	OK		
R*-VE-04*	3	OK	OK	OK	
R*-VE-05*	4	OK	OK	OK	
R*-VE-06*	5	OK	OK	OK	OK
RA-VE-073	6	OK	OK	OK	OK

Desuperheater, Domestic Hot Water

General
NHP NorthStar Series units are equipped with a desuperheater and an integrated circulating pump (can be a price deduct) that can provide Supplemental Domestic hot Water (SDW). This is done by stripping heat from the superheated gas leaving the compressor.

Fuses – 3-amp fuses are installed in series with the desuperheater pump. The fuses are located in the line voltage control box, upper right. Remove the fuses (turn 230 power source off) to disable the pump whenever the system is not in operation.

General Plumbing and Installation Suggestions
1. Insulated ½" copper piping should be used from the hot water tank to the desuperheater connections on the left side of the unit. The copper tubing should be straight to maintain good water velocity and prevent pockets from forming at the pump inlet.

⚠ CAUTION

Due to high water temperatures generated by the desuperheater, pex or poly pipe may rupture if coupled directly to heat pump outlet.

2. Shut off valves should also be used to service the desuperheater pump without draining the entire hot water tank. Note: Always be sure these valves are open when pump is running.
3. Pump problems develop by running the pump dry or with air in the system. All air must be purged from the desuperheater plumbing before the pump is engaged.
4. To purge air from the lines, loosen the desuperheater pump from its housing by turning the brass collar. Let water drip out of the housing until flow is established and re-tighten the brass collar.
5. Never operate the system without the high temperature switch (normally factory installed) otherwise tank temperatures could become dangerously high.
6. Poor water quality may restrict the effectiveness of using the desuperheater pump and will not allow the pump to circulate.
7. Desuperheater maintenance includes periodically opening the drain on the hot water tank to remove any deposits. Hard water may cause scale buildup in the desuperheater coil reducing its effectiveness.
8. The temperature difference between the water entering and leaving the desuperheater should be 5°F to 15°F. The water flow should be approximately 0.4 GPM per ton of nominal cooling.
9. Northern Heat Pump strongly suggests a water heater buffer tank, Figure 7, for the maximum efficiency from the provided desuperheater module. The Figure 7A single tank plumbing and application is shown for information only.

There are a number of ways the desuperheater/pump can be plumbed with and into the building/household water heater tank. **However**, many common methods used **are not** very effective because they simply circulate already heated water from the water heater tank through the desuperheater. The heat pump desuperheater cannot effectively produce hot water energy if the temperature of the water entering the desuperheater is close to or beyond the compressor gas capability to transfer energy into this circulated water – typically 110° F (43° C) to 130° F (54° C).

- Example – if the water heater electric element thermostat is set at 140° F (60° C), it will maintain the tank at 140° F (60° C). There is no point in circulating 140° F (60° C) water through the desuperheater because it is picking up very little or no energy from the compressor hot gas.
    - In fact, the energy flow may even be negative if the Geo HP loop temperature is too low, it is possible for a **single tank** hot water heater to actually flow energy into the Geo HP system with a negative effect on energy efficiency.

Figure 7 – Desuperheater Piping, Buffer Tank
This arrangement is the most effective and efficient and the recommended installation. The buffer tank need not be as big as the standard water heater; 40-gallon size can be very effective. With this two tank system the desuperheater will always act as a city/well water **pre-heater** and the standard water heater (electric elements or gas) only requires tempering energy which is a very small percentage of domestic water heater energy required.

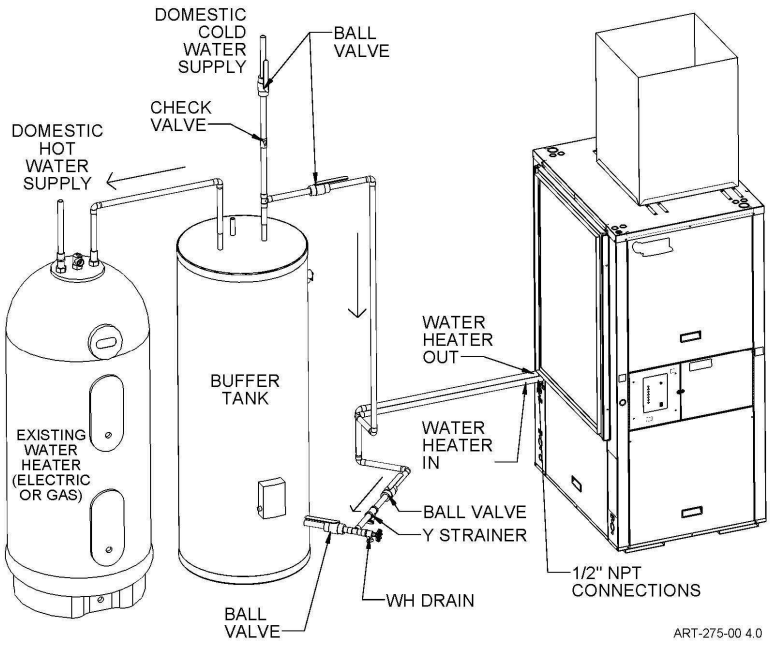

Figure 7A – Desuperheater, Single Tank Concept
Draw water from the bottom drain and returning it to the cold water supply line. This method requires a check valve in the cold water supply to prevent water from flowing into the building or household cold water supply. A spring-type check valve with a pressure rating of 1/2 PSI or less is recommended.

Inspect the dip tube in the water heater cold inlet for a check valve. If a check valve is present it must be removed or damage to the desuperheater circulator will occur.

Before restoring electrical supply to the water heater, adjust the temperature setting on the tank.

- On tanks with both upper and lower elements, the lower element should be turned down to the lowest setting, approximately 100° F (38° C). The upper element should be adjusted to 120° F (49° C) to 130° F (54° C). Depending upon the specific needs of the customer, you may want to adjust the upper element differently.
    - On tanks with a single element, lower the thermostat setting to 120° F (49° C).

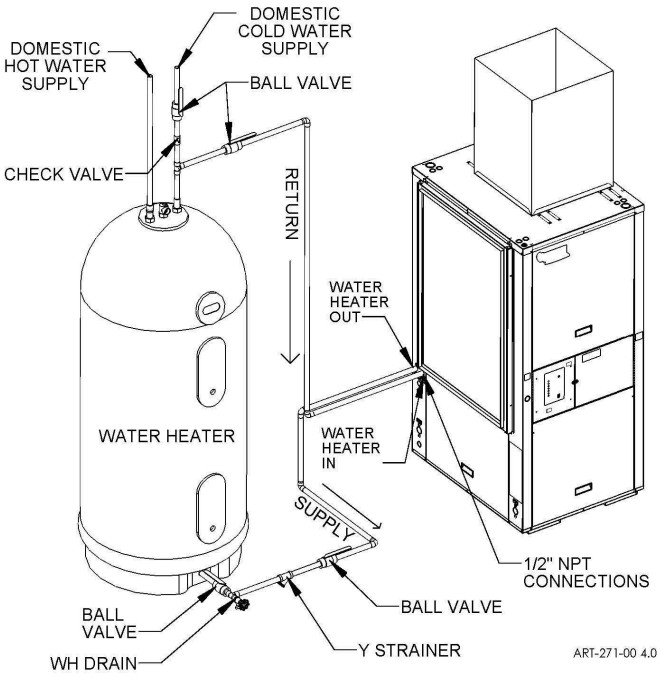

⚠ CAUTION

Do not run desuperheater pump without supply from water heater. This will damage the pump.

Electrical Hookup

⚠ WARNING

DISCONNECT ALL ELECTRICAL POWER BEFORE ELECTRICALLY CONNECTING OR SERVICING THE UNIT. FAILURE TO DISCONNECT THE ELECTRICAL POWER BEFORE WORKING ON THIS PRODUCT CAN CREATE A HAZARD LEADING TO PERSONAL INJURY OR DEATH.

Line Voltage

The nameplate and/or Installation and Operating Manual specification page provides RLA, LRA, and total amps requirement. Select the proper wire size to comply with your type of wire routing and NEC field wiring requirements.

- If this unit includes AUX EL module, its own nameplate provides kW and current/voltage requirement.

The field power supply connection is at the compressor contactor, at the end of the line voltage control box.

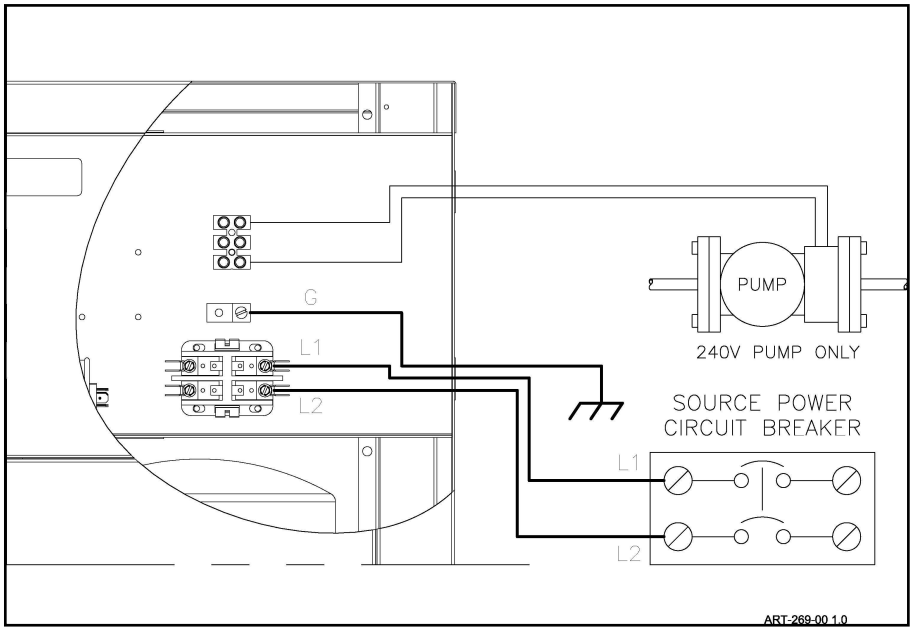

Disconnect – field provided external safety disconnect is required, see nameplate max amps.

Loop pumps – the loop pump station can be powered at the TB above the contactor. 10-amp fusing is included, left of terminal block.

Grounding – route and install the proper size ground conductor between the ground lug above the compressor contactor and the building service entrance panel ground bus. This must be a conductor wire size according to NEC code for the total amp rating of the installed model. The conduit is not sufficient ground conductor.

⚠ WARNING

USE ONLY COPPER WIRE FOR CONNECTION TO THE CIRCUIT BREAKER TERMINALS AND INSIDE THIS PRODUCT'S CABINET.

⚠ WARNING

TO AVOID THE RISK OF ELECTRIC SHOCK OR DEATH, WIRING TO THE UNIT MUST BE PROPERLY GROUNDED. FAILURE TO PROPERLY GROUND THE UNIT CAN RESULT IN A HAZARD LEADING TO PERSONAL INJURY OR DEATH.

EZGEO Controller

EZGEO Features

Review attached HC112 HELPS document which lists the various characteristics and capability of this controller product.

Application

The EZGEO controller is standard on all Northern Heat Pump models. For this model, the controller is designed to run under 1 of 3 different operating "modes".

- Basic water to air packaged unit – mode A
- Basic water to air packaged unit with added gas furnace – mode C
- Basic water to air packaged unit with Electro Industries' WarmFlo® strip heat and gas furnace – mode B
- Factory default – mode A and SW OVER = Ø
- When shipped with factory installed strip heat, factory settings are set to Mode B and SWOVER = Ø

⚠ WARNING

IF THERE IS NO AUTOMATIC STANDBY (GAS) OPERATING FROM THE EZGEO FURNACE TB-W, THE SW OVER DIAL SWITCH MUST BE SET TO Ø POSITION. THIS STATEMENT RELATES TO MODES B, C, AND D. ONCE THERE IS A LOGIC TRANSFER TO SB, THE FURNACE MUST FINISH OUT ROOMSTAT-W. THUS THERE IS NO FURNACE OR NO HEAT THE SYSTEM WILL BASICALLY BE LOCKED UP WAITING FOR HEAT ENERGY TO SATISFY THE THERMOSTAT.

Room Thermostat

This is general hookup information, before proceeding review next section – EZGEO Controller – to determine the operating **mode** for this particular application.

Use **conventional** (not heat pump with O and compressor Y) heat/cool. This controller is designed to operate from a basic 1H/1C thermostat. 2H/2C can also be used. See next section for comments relating to W2 and Y2 from the thermostat.

The thermostat can be mechanical, digital, power robbing, battery operated, setback, etc. If required, set heat anticipator to 0.2. If electronic/digital stat, setup may ask for "cycles per hour". As with most heat pump products, the efficiency of your Northern Heat Pump relates directly to long run times. We recommend a small number of cycles (2 cycles per hour).

> **Note 1:** Do not (even with heat pump) use a heat pump thermostat.
>
> **Note 2:** If programmable roomstat has external sensors, make sure setup is for display monitor only and any programming for these sensors that has to do with interrupting any output functions, ODT, auxiliary, setback, etc. are **not active** or program **disabled**.
>
> **Note 3:** A high quality digital thermostat (part number 5021) is available from Northern Heat Pump which has been pre-programmed to match the requirements of this unit. See the Accessories list later in this manual.

Connect the standard R, W, G, and Y (and W2 and Y2 in the case of 2H/2C) stat terminals to the control board upper left terminal block. If the specific roomstat requires common or C, this can be picked up from a tab on the board bottom right. See NH401.

⚠ NOTE

The installer must be familiar with the manufacturer's low voltage wiring terminology, screw terminal terminology/colors, etc. This manufacturer's terminology must be related to Northern Heat Pump's screw terminal identification within this controller. The intent of this instruction manual is **not** to train each installer on the terminology related to the specific product you are installing.

Utility Load Control

Bottom 2-screw terminal block marked blue and blu/wht. Remove the jumper and extend the two wires to the utility furnished control device. For electric energy operation (off-peak) the two blue wires represent contact closure as shipped. **Do not apply external voltage or external power to the blue wires**, they are simply looking for a closed contact during off-peak.

- The maximum "AC noise" on the blue wire is 5 volts, peak to peak. The blue/white wire is actually common and if grounding is proper as suggested in the next paragraph, this should dampen any effect. But it is always good practice to run these wires separate from any current carrying line voltage Romex or other conductors.
- One load control wire pair handles both winter and summer interrupt.
- If load control reverse logic is required, a "closed to interrupt contact" can be connected to SB SW to COM. Another way to resolve this issue is through the use of an interposing relay. Consult factory if an interposing relay is required.
- If load management interrupt does not apply, simply leave the blue wires jumpered.

Grounding

The 24-volt transformer and EZGEO board common are grounded at the compressor contactor coil common side.

EZGEO Wiring Connections

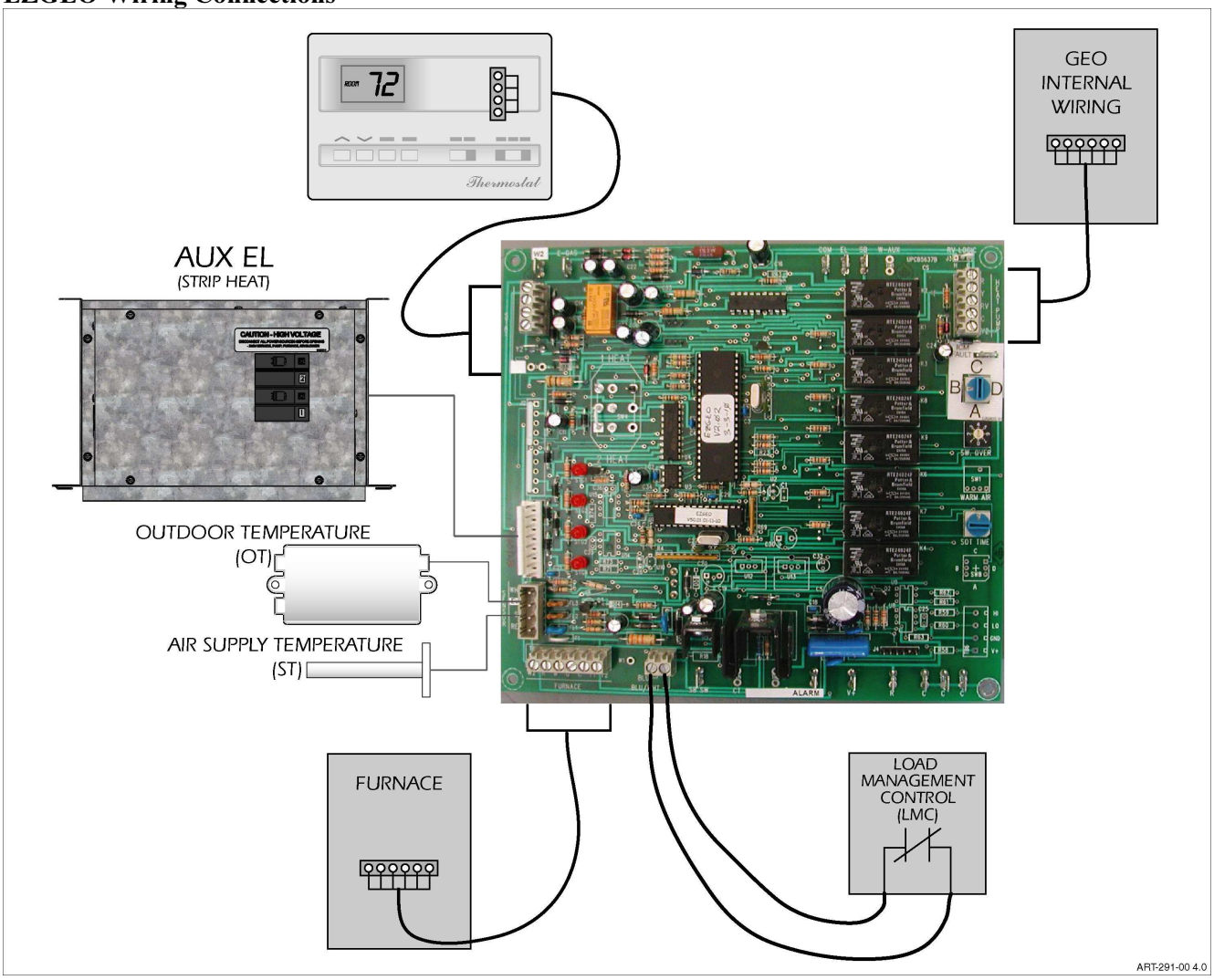

Visual example only – the exact connections will depend upon operating mode. Review previous section – EZGEO Controller.

Temperature Sensors

⚠ WARNING

BOTH MUST BE INSTALLED ON ALL MODELS.

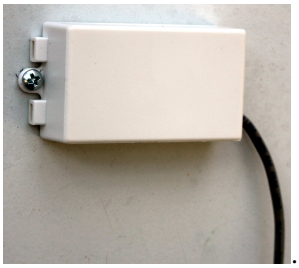

Outdoor Sensor (OT) – extend sensor to an outdoor location properly sampling the outdoor temperature. Select a location away from direct sunlight and where the sensor will not pick up false temperature from the heat pump outdoor unit, refrigerant line sets, dryer vent, reflection off of steel siding, etc. Do not install the sensor in any type of enclosure, as this will falsely trap and pick up radiant sun temperature. Mount the sensor horizontally on the structure using the screws provided.

Duct Sensor (ST) – install in the Geo supply air plenum, at least 24" (61 cm) above the strip heat element (airflow inches). The ST sensor does not have an end cap; the small black electronic part just within the tube end is the actual temperature sensor. It is desirable for the air coming out of the coil to pass as close as possible to the black tip without warm-up or dampening delay. For best results, the sensor should be positioned in the maximum warm air stream.

Other Sensor Related Comments

If additional cable length is required, you must use the following rules for extending the cable.

- Use unshielded (low capacitance, preferred twisted) 3 or 4-wire low voltage cable.
- 50 (15 meters) feet is maximum (total).
- Do not, under any circumstances, use leftover wires within the normal thermostat cable.
- Route the sensor cable making sure you do not crimp, cut, staple, or damage the cable in any way.
- Keep sensor cables at least 12" (30 cm) away from any line voltage wiring, romex, etc.

For easy sensor cable disconnect and reconnect, the WarmFlo board has a plug-in 4-place terminal block. Before disconnecting, you will notice two red wires are under the red screw and two white wires is under the COM screw. The black wire represents the data information from each sensor and must be connected to the appropriate OT or ST screw.

The sensor has polarity, is sensitive to incorrect voltage, and must be protected from static voltage. Do not cross connect or inadvertently short out sensor wires with power on. Permanent sensor damage may result.

Gas furnace – if this is a "dual fuel" installation including a gas or oil backup furnace, only two wires are required between this controller and the gas furnace terminal block. It is assumed the gas furnace will take care of its own blower based upon a gas-W heat call and the Geo unit blower is off when this controller is in standby or gas mode.

EZGEO	Gas Furnace
W	W
C	Common

Comment: The "G" wire between this controller and the Geo unit may or may not be the correct connection. If the Geo unit blower is in continuous air with gas furnace running that may not be desirable. At the top of the EZGEO board are three tabs relating to standby/electric mode. If there is a desire to interrupt this "G" wire during standby, route this wire through the COM and EL tabs.

Additional Hookup or Special System Equipment Concerns

Additional Room Thermostat Connection Points

On the EZGEO board, upper left, are two optional control tabs – W2 and E-GAS. These can be used for troubleshooting or emergency full output energy or with a conventional 2H/2C room thermostat. If the Geo system has been sized to meet 100% of the heating load, it may be desirable to control the strip heat (if equipped) at the thermostat. Configuring the thermostat to 2H/2C or 2H/1C and setting the AUX EL dial to "Disable" allows the EZGEO control to function in this manner.

W2 – mode B, this conditions AUX EL all stages on.

- E-GAS – this conditions the system to standby or transfers the room thermostat W to gas furnace. This is active for all modes, it should never be used for mode A when a gas furnace is not connected.

  Note: The Y2 input has no function for this single stage model.

Special Oil Furnace Comment

This controller is designed to interface directly with a furnace fan center containing 24-volt transformer (40VA or larger), blower relay, and a "W" function to operate the furnace. If this installation is for an **oil furnace** with only oil control "T and T" terminals, a special fan center will need to be added with an isolation relay at the "W" terminal so only isolated contacts are connected to the oil burner master control "T and T". Another choice is to order EE-5053 relay with accompanying HD001 instruction sheet.

Remotely Located Standby Override Switch

On the bottom of the board is an "SB SW" tab. Using an external switch between this "SB SW" tab and a common tab provides the same function as the two-position system selector switch on the front of your EZGEO control panel. In this configuration, either of these switches allows the homeowner to manually force the HVAC system to utilize a fossil fuel system. A closure of the external switch is the equivalent to the system selector switch being in the "up" or "standby" position.

> **Important note on cooling mode:** To operate in cooling mode, neither of the switches can be in the override position. Thus, the selector switch on your EZGEO control panel MUST be in the "down" position AND the external switch must be in "heat pump" or "normal" position in order for the heat pump to operate in cooling mode. If one or both of these switches are not the proper positions, cooling will not occur.

Load Control, Other Products or Hardware

If there is a need to "pass on" the utility load control receiver function to other heating equipment, radiant floor boiler, peak interrupter, etc; there is an isolated contact on the control board. Locate tabs COM/EL/SB. In the electric mode, there is an isolated contact between COM and EL. This contact is for low voltage only, 1-amp maximum.

Note: There may be a 1 or 2 minute delay between this relay contact action and the actual load control receiver. This delay coincides with various blower purge functions.

Note: This contact **also** follows front panel standby switch and all other standby functions such as SOT-S, etc.

Optional – NHP Geo Alarm

As shown on hookup drawing NH401, there are provisions for an external buzzer and LED device. When the Geo HP declares a fault or dead compressor alarm, this device will sound an audible and turn on the LED light.

- The 2-wire hookup can be extended as much as 100 feet (30 meters), use 18 or 20 gauge wire.
- The audible can be turned off with the pushbutton. But if the system is not repaired within 4 hours the audible will again sound.
- The LED light will continue until the system is repaired and power off reset.
- The system may recover on its own, but the LED will continue indicating there "was" a fault situation. This LED is only turned off by a power off reset at the disconnect.
- Order part number R-AL-FD-1

Field Setup Overview

Your EZGEO-equipped Northern Heat Pump can be set up at your location to fit most any requirements and conditions. This is accomplished with the use of the various dials and switches located on the EZGEO board. It is extremely important the installer properly goes through this section and sets up the various switches to match the installation. Again, refer to HC112 Helps – EZGEO Controller section for further details on these setups. The diagram below shows the dial locations on the EZGEO board.

Warning: Power-down reset required whenever changing any of the switch positions on the back side of the board.

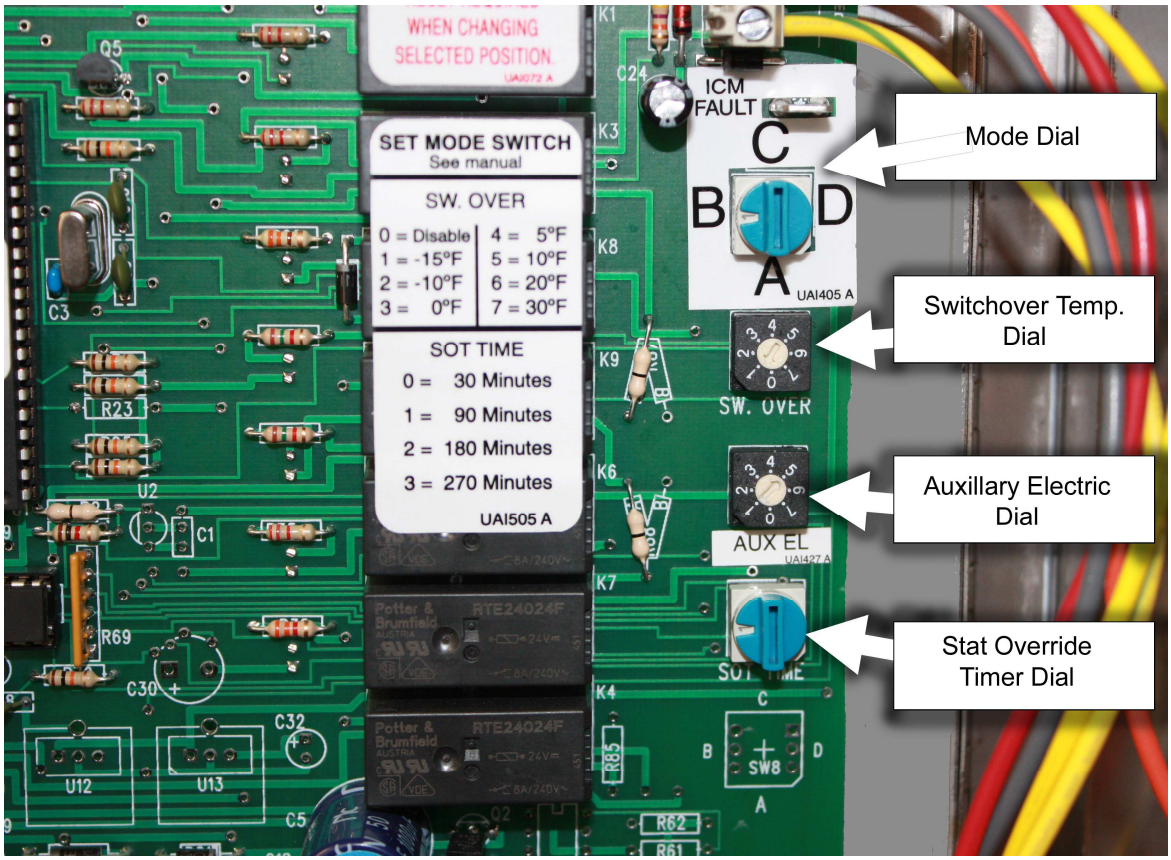

Mode Dial

Mode Switch	Mode	SW OVER	Configuration
A	Geo only	N/A	No AUX EL, no gas, no auto SB, but load control can interrupt compressor for cooling (not heating)
B	Geo/AUX EL	0	AUX EL (with compressor supplement or emergency), utility load control, etc.
	Geo/AUX EL/gas	Value	AUX EL, gas, auto SB, utility load control, etc. AUX EL is used above SW OVER value, below SW OVER point gas has priority.
C	Geo/gas	Value	No AUX EL, gas furnace, auto SB, utility load control
D	Split/gas	Value	Not applicable for this model

*Mode B also requires the proper setting and interpretation of SW OVER dial switch. As shown in the mode selection table, if the configuration is AUX electric only, SW OVER switch must be in position 0. If it is both AUX EL and gas, the SW OVER switch must be in a temperature value position.

Switchover Temperature (SW OVER)
This switch is shipped from the factory with a square "GAS" label. This label should be removed ONLY if a secondary furnace is present and active in the system. The installer should remove the label and adjust this switch only after reading this manual and understanding the operation of the switch. Select the OT temperature to interrupt the compressor and transfer to the sequence shown on applicable mode Figures 2, 3, 4. This only applies when a gas furnace is connected. For all non-SB configurations must be set to 0 position (disable). From the factory, this switch is set to 0 (Disable).

0 = Disable	4 = 5° F
1 = -15° F	5 = 10° F
2 = -10° F	6 = 20° F
3 = 0° F	7 = 30° F

Strip Heat Enable/ Disable(AUX EL)
When equipped with an auxiliary strip heater, the AUX EL dial allows the EZGEO control to be configured to enable the strip heat based upon the outdoor temperature (OT). Setting the dial to 0 = Disable, the strip heat will not turn on unless W2 is energized. When W2 is energized, all strip heat stages are activated. Setting the dial to 7 = Enable, will activate all stages of the strip heat at the beginning of a heat call. Please note, the Enable dial setting is typically only used during initial startup inspection, troubleshooting, or in special cases when strip heat is needed to operate all the time. If AUX EL dial is set to enable during a heat call, all strip heat stages will remain active until the end of the heat call regardless of where AUX EL dial is set back to.

Warning: Leaving the AUX EL dial set to the Enable position will lead to reduced system efficiency and higher operating costs.

0 = Disable	4 = 0˚ F (default)
1 = -30˚ F	5 = 5˚ F
2 = -20˚ F	6 = 10˚ F
3 = -10˚ F	7 = Enable

Stat Override Timer (SOT)
Again, see the appropriate mode Figures 1, 2, 3, 4 for the sequence action after the SOT timeout (end). The intent of the SOT is to take care of very unusual heat/cool conditions or building matching situations, the general sequence relating to OT temperature should take care of proper thermostat cycling without ever reaching SOT timeout (end). Thus, it is recommended the SOT be a high number.

0 = 30 minutes	2 = 180 minutes
1 = 90 minutes (default)	3 = 270 minutes

Information
Front panel decal showing efficiency dial and LED's.

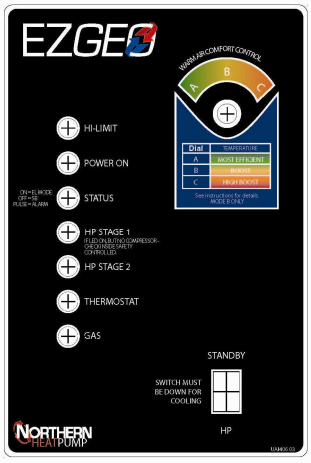

Efficiency Setting (Front Panel)
This applies to **AUX EL module** or supplementary heating only, mode **B**. By adjusting this dial switch the homeowner can boost the ST target temp.

A = ST target temperature
B = +5° F
C = +10° F

Gas Furnace CFM
See previous page on gas furnace hookup for proper programming of ECM motor for the required CFM output.

Outdoor Temp (OT) Factory Default Settings

	Default
ST target temp	90° F (32° C)
Dead compressor ST	70° F (21° C)
OT temp, heating – HI >	20° F (-6° C)
OT temp, cooling – HI >	90° F (32° C)

EZGEO Board Dial Configurations
Below is a list of different configurations the EZGEO system can be adapted to and the matching appropriate EZGEO board settings.

Heat pump only

- Mode Dial: A
- SW Over Dial: 0
- AUX EL: 0
- SOT Dial: 0=30min 1=90min 2=180min 3=270min
- Thermostat type: Conventional 1H/2C

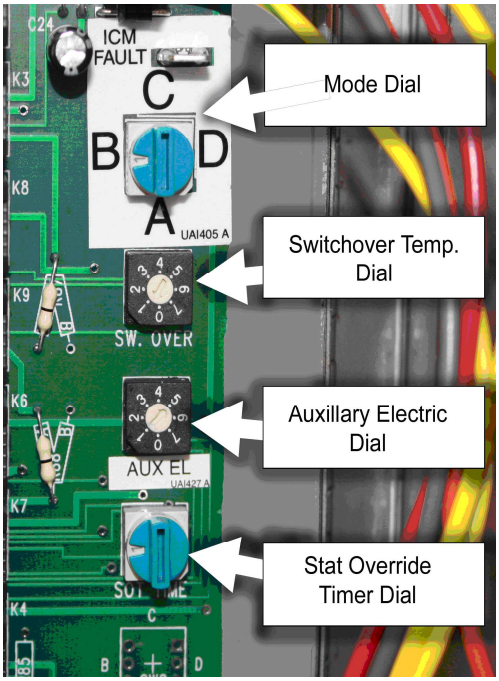

Undersized heat pump with electric heat package

- Mode Dial: B
- SW Over Dial: 0
- AUX EL: 1=(-30°F) 2=(-20°F) 3=(-10°F) 4=0°F 5=5°F 6=10°F
- SOT Dial 0=30min 1=90min 2=180min 3=270min
- Thermostat type: Conventional 1H/2C/E

Heat pump with emergency electric heat package

- Mode Dial: B
- SW Over Dial: 0
- AUX EL: 0
- SOT Dial: 0=30min/ 1=90min/ 2=180min/ 3=270min
- Thermostat type: Conventional 2H/2C

Undersized heat pump with electric heat package and fossil fuel furnace (for load control).

- Mode Dial: B
- SW Over Dial: 0
- AUX EL: 1=-30°F 2=-20°F 3=-10°F 4=0°F 5=5°F 6=10°F
- SOT Dial: 0=30min 1=90min 2=180min 3=270min
- Thermostat type: Conventional 1H/2C/E

Geothermal heat pump with electric heat package and fossil fuel furnace (for load control).

- Mode Dial: B
- SW Over Dial: 0
- AUX EL: 0
- SOT Dial: 0=30min 1=90min 2=180min 3=270min
- Thermostat type: Conventional 2H/2C

Undersized geothermal heat pump with fossil fuel furnace.

• Mode Dial: C
• SW Over Dial: 1=-15°F/ 2=-10°F/ 3=0°F/ 4=5°F/ 5=10°F/ 6=20°F/ 7=30°F
• AUX EL: 0
• SOT Dial: 0=30min 1=90min 2=180min 3=270min
• Thermostat type: Conventional 1H/2C

Geothermal heat pump with fossil fuel furnace.

• Mode Dial: C
• SW Over Dial: 0
• AUX EL: 0
• SOT Dial: 0=30min 1=90min 2=180min 3=270min
• Thermostat type: Conventional 1H/2C

Operation Indicators

Front Panel LED's

- **Hi-limit** – when the AUX EL hi-limit probe (automatic reset or manual reset) opens this top red LED is on. The electric elements will be interrupted via a safety relay circuit whenever this HL LED is illuminated (mode B only).
- **PWR ON** – indicates good fuse and 24-volt power source from the furnace terminal block.
- See below for bad sensor indication.
- **Status mode** – in some ways this can be a utility load control indicator, but there are additional programmable functions which cause this unit to go to standby (see HC112 EZGEO section and sequence charts).
- In addition this LED provides monitor for the two alarm conditions.
    - Dead compressor – fast pulsing, 1/10 second
    - ICM fault – slow pulsing, 1 second
- **HP-Y1** – the output "Y" screw terminal is active at 24 volts high. This provides the "Y" input to the ICM compressor monitor board. Compressor will react as a function of this ICM safety board.
- **HP-Y2** – not used on single stage models.
- **T-stat call** – the room thermostat W or Y is active or 24 volts high.
- **Gas call** – the furnace "W" or terminal block feeding furnace W, 24 volts high.

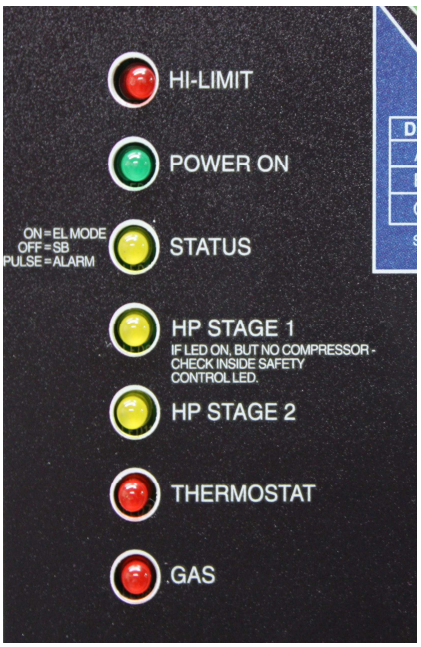

Override Switch – the front panel slide switch (very similar to standard Electro-Mate DFC) is a direct hardware disabling of the HP-Y1 and electric elements functions. The room thermostat heat call wire or function is directly controlling the fossil fuel or gas furnace. This function can also be on a remote switch, see previous statement for "SBSW" tab.

⚠ WARNING

THIS FRONT PANEL MANUAL OVERRIDE SWITCH IS A HARDWARE DIRECT TO GAS FURNACE FUNCTION. THUS THERE ARE NO BLOWER PURGE CYCLES. IF THE ELECTRIC ELEMENTS ARE ON AND HOT WHEN SWITCHING TO OVERRIDE AND IMMEDIATELY ALLOWING THE GAS FURNACE, OVERHEAT ON THE ELECTRIC ELEMENTS AND POTENTIAL ELECTRO-MATE MANUAL RESET IS POSSIBLE. THIS FRONT PANEL OVERRIDE SWITCH SHOULD ONLY BE ACTIVATED WHEN THERE IS NOT A ROOMSTAT HEAT CALL.

Note: This switch must be in the "normal" position during **cooling**.

ICM board (inside) – fault LED pulses with last open limit condition, see next page.

Sensor Monitor Indicators – in addition to using PC software to readout the temperature sensors, there is a built-in go/no-go type monitor visible on the green PWR ON second from the top LED.

- If there is detection of miswired or totally inoperative sensor, this LED has a blinking or pulse mode. By checking the pulsing pattern, the appropriate sensor can be identified.
- ST sensor - two, 100 ms blinks every second
- OT sensor - 100 ms blink every second
- Both bad - ½ second on, ½ second off, alternating.

ECM Blower – CFM

The ECM motor is programmed to produce the CFM airflow associated with each model. The CFM is also controlled by heat/cool mode and the compressor stages.

Model	Stage	Heat CFM	Cool CFM	Stat G
RT-VE-026	Full Load	850	950	450
RT-VE-026	Part Load	725	825	450
RT-VE-040	Full Load	1200	1250	600
RT-VE-040	Part Load	1000	1050	600
RT-VE-045	Full Load	1312	1400	700
RT-VE-045	Part Load	1100	1150	700
RT-VE-052	Full Load	1500	1600	750
RT-VE-052	Part Load	1200	1275	750
RT-VE-062	Full Load	1875	2000	900
RT-VE-062	Part Load	1580	1650	900

Power On, Startup

Before applying power to the heat pump, check the following items:

1. Water supply plumbing to the heat pump is complete and operational.

2. Low voltage wiring of the thermostat and any additional control wiring is complete.

3. Set thermostat to the **OFF** position.

4. All high voltage wiring is correct including fuses, breakers, and wire sizes.

5. The heat pump is located in a warm area above 50°F [10°C]. Starting the system with low ambient temperature conditions is more difficult.

6. Manually open water valve on well system to check flow. Never operate the system without adequate source water ground loop or open loop supply.

7. You may now apply power to the unit. A 1 to 5 minute delay on power up is programmed into the heat pump before the compressor will operate. This delay prevents short cycling of the unit.
    - During this time the blower may be active.
    - Verify water flow rate and temperature of the source side flow to be at recommended levels.

8. The source side water flow rate is at the required level, see specification page. Low water temperature starting may require flow reduction until the system is up to operating temperature.

The following steps will assure that your system is heating and cooling properly. After the initial time-out period is completed the heat pump is now ready for operation. Note: EZGEO, HC112, sequence charts (mode A, B, C, D) determine compressor staging.

1. Place the thermostat to the “HEAT” position. Turn the thermostat up to activate a call for heat. The compressor should start.

2. After the unit has run for about 3 minutes, check the source side supply and return water temperature. water temperature **decrease** is normal in the heating mode, but the specific operating water temperature can effect the water flow rate (GPM) stated in the specification table.

3. Verify warm air temperature rise and loop source water decrease are approximately as stated in the specification table, page 3.

4. Turn the thermostat to the off position. The compressor will shut down in a few seconds.

5. Place the thermostat in the “COOL” position. Next turn thermostat down to active a call for cooling. The compressor will start after a 5 minute anti-short cycle period from its last shutdown.

6. After the unit has run about 3 minutes, check the source side supply and return water temperatures. A water temperature **rise** is normal in the cooling mode.

7. Verify cool air temperature drop and loop source water increase are approximately as stated in the specification table, page 3.

8. Instruct the owner on correct operation of the thermostat and heat pump system.

Operational Tips

ICM Board – The ICM board performs the functions controlling the compressor operation: system lockout, compressor anti-short cycle, and a five minute delay after power is applied.

The control will begin the 5-minute time delay upon a Y call from the thermostat. After the time delay expires, the compressor contactor will be energized as long as the high and low pressure switches are closed. If either switch is open after the delay expires, the compressor will not energize. If either switch opens while the compressor is energized, it will de-energize immediately and begin the anti-short cycle delay. The compressor will not be allowed to turn on again until the anti-short cycle delay expires and both pressure switches are closed. The flow switch will have a 30-second bypass timer in which the control will ignore an open flow switch for the first 30 seconds. If the flow switch remains open after the 30-second bypass timer expires, the unit will de-energize the compressor and begin the anti-short cycle delay. If the control experiences three high pressure, low pressure, or flow switch faults in a 60-minute period, it will lock out the compressor and energize the fault output. A manual reset of power will be required to reset the lockout condition.

Problems that could cause a lockout situation include:

1. Water flow problems
2. Air flow problems
3. Internal heat pump operation problems
4. Cold ambient air temperature conditions

The control has a status LED to indicate which type of fault or lockout has occurred. If a high pressure fault or lockout occurs, the status LED will blink once. If a low pressure fault or lockout occurs, the status LED will blink twice. If a flow switch fault occurs, the status LED will blink three times.

ICM Fault Code LED

1 blink = high pressure cutout (550 PSI)
2 blink = low pressure cutout (40 PSI)
3 blink = Flow switch open

The anti-short cycle function puts a time-out period of **5 fixed ±20%** minutes on the compressor before re-starting. This function protects the compressor from repeated on/off operation in the event of a loose wire or faulty controller.

⚠ CAUTION

The front panel override switch **should not** be changed during a heat call. There are no purge cycles when manually changing the override switch with an active heat call and could cause an undesired overheat situation

High and Low Pressure Switches – The heat pump is equipped with both high and low pressure switches that shut the unit off if the refrigerant pressure exceeds 550 PSI or goes below 40 PSI. The freeze protection switch (on open loop systems) will also activate the lockout at 40 PSI in the heating mode to protect the water coil against freeze rupture. Do not reset a well water system in the heating mode without first verifying water flow.

DO NOT reset the system more than once.
Repeated resetting of the lockout can cause serious damage. **If same lockout occurs contact your service dealer immediately.**

PAGE RESERVED FOR NOTES BY HOMEOWNER

Unit Operating Conditions – Heat

Model	Stage	Source Temp	Source temp Δ	GPM	Air temp Δ	Amps 240	Blower AMPS	CFM	Discharge pressure at 68 deg A-RT	Discharge temp	Sub cool at TXV	Suction pressure at bulb	Suction temp at bulb	Super-heat at bulb
RT-VE-026	2	32	1.9-3.9	10	26-31	7.2-9.2	1.0	800-840	324-344	165-171	10.0-14.0	83-93	34-40	10-14
	2	50	5.6-7.6	10	33-38	8.1-10.1	1.1	810-850	368-388	165-171	11.0-15.0	114-124	48-54	10-14
	2	68	5.8-7.8	10	42-47	9.4-11.4	1.2	820-860	423-443	169-175	11.0-15.0	152-162	65-71	10-14
	1	41	2.0-4.0	10	24-29	5.3-7.3	0.9	720-760	308-328	152-158	6.5-10.5	102-112	43-49	10-14
	1	50	2.5-4.5	10	27-32	5.4-7.4	0.9	720-760	326-346	153-159	6.5-10.5	120-130	51-57	10-14
	1	68	4.4-6.4	10	33-38	5.8-7.8	0.9	710-750	365-385	154-160	6.0-10.0	155-165	67-73	12-16
RT-VE-033	2	32	2.6-4.6	10	28-33	9.1-11.1	1.5	930-970	340-360	142-148	11.0-15.0	83-93	33-39	10-14
	2	50	4.2-6.2	10	35-40	10.4-12.4	1.5	930-970	390-410	145-151	11.8-15.8	115-125	48-54	11-15
	2	68	6.5-7.5	10	42-47	11.9-13.9	1.5	930-970	440-460	147-153	8.2-12.2	154-164	64-70	9-13
	1	41	2.5-4.5	10	26-31	6.2-8.2	1.0	760-800	326-346	137-143	7.0-11.0	103-113	45-51	11-15
	1	50	2.9-4.9	10	30-35	6.5-8.5	1.0	760-800	350-370	138-144	6.9-10.9	124-134	52-58	9-13
	1	68	4.8-6.8	10	36-41	7.2-9.2	1.1	760-800	390-410	137-143	6.5-10.5	163-173	67-73	9-13
RT-VE-040	2	32	3.8-5.8	9	25-30	10.6-12.6	1.8	1170-1210	302-322	155-161	10.0-14.0	75-85	32-38	11-15
	2	50	5.9-7.9	9	32-37	11.9-13.9	1.9	1180-1220	340-360	155-161	11.0-15.0	106-116	47-53	11-15
	2	68	8.3-10.3	9	39-44	13.8-15.8	1.9	1180-1220	385-405	157-163	11.4-15.4	145-155	62-68	10-14
	1	41	3.5-5.5	9	24-29	7.5-9.5	1.3	980-1020	295-315	147-153	7.0-11.0	98-108	41-47	10-14
	1	50	3.8-5.8	9	28-33	7.5-9.5	1.3	980-1020	312-332	148-154	7.0-11.0	115-125	48-54	10-14
	1	68	6.2-8.2	9	33-38	7.9-9.9	1.3	1000-1040	346-366	145-161	6.6-10.6	152-162	66-72	11-15
RT-VE-045	2	32	3.7-5.7	10.5	24-29	12.4-14.4	2.4	1300-1340	303-323	158-164	10.0-14.0	76-86	32-38	12-16
	2	50	5.6-7.7	10.5	31-36	13.9-15.9	2.4	1300-1340	342-362	154-160	10.5-14.2	107-117	45-51	10-14
	2	68	8.2-10.2	10.5	37-42	15.9-17.9	2.4	1310-1350	382-402	158-164	9.3-13.3	143-153	61-67	10-14
	1	41	3.3-5.3	10.5	23-28	8.6-10.6	1.8	1090-1130	290-310	150-156	7.1-11.1	96-106	42-48	11-15
	1	50	3.8-5.8	10.5	26-31	8.9-10.9	1.8	1080-1120	310-330	144-150	6.5-10.5	114-124	49-55	10-14
	1	68	6.1-8.1	10.5	32-37	9.6-11.6	1.8	1080-1120	347-367	141-147	5.1-9.1	152-162	65-71	10-14
RT-VE-052	2	32	4.0-6.0	12	27-32	16.6-18.6	2.7	1480-1520	323-343	168-174	8.0-12.0	76-86	31-37	12-16
	2	50	5.9-7.9	12	34-39	18.6-20.6	2.8	1480-1520	365-385	166-172	10.6-14.6	105-115	44-50	10-14
	2	68	8.6-10.6	12	41-46	21.0-23.0	2.8	1490-1530	410-430	168-174	10.0-14.0	140-150	59-65	9-13
	1	41	3.5-5.5	12	25-30	11.8-13.8	1.8	1160-1200	310-330	163-169	4.2-10.2	98-108	43-49	11-15
	1	50	3.9-5.9	12	28-33	12.3-14.3	1.9	1180-1220	328-348	163-169	5.4-9.5	113-123	49-55	11-15
	1	68	6.4-8.4	12	35-40	12.9-14.9	2.0	1180-1220	368-388	153-159	6.4-10.4	152-162	64-70	10-14
RT-VE-062	2	32	3.6-5.6	15	27-32	19.0-21.0	4.1	1830-1870	318-338	163-169	10.0-14.0	75-85	30-36	10-14
	2	50	5.7-7.7	15	34-39	20.9-22.9	4.2	1840-1880	360-380	162-168	11.0-15.0	103-113	45-51	11-15
	2	68	8.5-10.5	15	42-47	23.2-25.2	4.2	1840-1880	410-430	167-173	16.0-20.0	139-149	60-66	11-15
	1	41	3.5-5.5	15	27-32	14.8-16.8	2.9	1510-1550	316-336	160-166	7.0-11.0	95-105	40-46	10-14
	1	50	4.0-6.0	15	31-36	15.3-17.3	2.9	1520-1560	338-358	157-163	9.0-13.0	113-123	47-53	10-14
	1	68	6.4-8.4	15	38-43	16.3-18.3	3.0	1520-1560	375-395	158-164	11.0-15.0	148-158	63-39	11-15

Unit Operating Conditions – Cool

Model	Stage	Source Temp	Source temp Δ	GPM	Air temp Δ Dry bulb	Amps 240	Blower AMPS	CFM	Discharge pressure at 80 deg A-RT	Discharge temp	Sub-cool at TXV	Suction pressure at bulb	Suction temp at bulb	Super-heat at bulb
RT-VE-026	2	50	6.6-8.6	10	21.3-26.3	5.2-7.2	1.6	940-980	194-214	111-117	2.0-6.0	129-139	58.0-64.0	13.0-17.0
	2	59	6.2-8.2	10	21.0-26.0	5.5-7.5	1.6	940-980	218-238	116-122	2.0-6.0	133-143	58.6-64.6	12.5-16.5
	2	77	5.6-7.6	10	19.7-24.7	6.8-8.8	1.6	930-970	280-300	135-141	2.0-6.0	136-146	60.4-66.4	12.6-16.6
	2	86	5.0-7.0	10	18.9-23.9	7.6-9.6	1.6	930-970	318-338	144-150	2.2-6.2	138-148	60.8-66.8	11.8-15.6
	1	50	4.4-6.4	10	19.3-24.3	2.7-4.7	1.3	850-890	170-190	100-106	2.0-6.0	137-147	61.8-67.8	13.3-17.3
	1	59	4.3-6.3.	10	19.4-24.4	3.3-5.3	1.3	850-890	205-225	106-112	2.0-6.0	139-149	60.8-66.8	11.5-15.5
	1	68	4.4-6.4	10	18.8-23.8	3.6-5.6	1.3	850-890	230-250	116-122	2.0-6.0	142-152	62.6-68.6	11.9-15.9
	1	86	3.4-5.4	10	17.6-23.6	5.0-7.0	1.3	850-890	305-325	138-144	2.0-6.0	145-155	63.7-69.7	11.7-15.7
RT-VE-033	2	50	7.0-9.0	10	22.0-27.0	6.8-8.8	1.6	990-1030	193-213	106-112	4.0-8.0	121-131	60.0-66.0	19.0-23.0
	2	59	7.2-9.2	10	22.0-27.0	7.0-9.0	1.6	990-1030	223-243	109-115	3.2-7.2	124-134	58.0-64.0	15.2-19.2
	2	77	6.5-8.5	10	18.5-23.5	8.3-10.3	1.6	1000-1040	285-305	122-128	2.8-6.8	130-140	60.0-66.0	14.7-18.7
	2	86	5.9-7.9	10	19.0-24.0	9.0-11.0	1.6	1010-1050	326-346	131-137	3.4-7.4	133-143	62.0-68.0	14.8-18.8
	1	50	4.6-6.6	10	20.0-25.0	3.3-5.3	1.1	790-830	173-193	94-100	2.5-6.5	133-143	62.0-68.0	14.9-18.9
	1	59	4.6-6.6	10	19.0-24.0	3.6-5.6	1.1	790-830	205-225	100-106	2.4-6.4	134-144	61.0-67.0	13.7-17.7
	1	68	4.4-6.4	10	18.5-23.5	4.2-6.2	1.1	800-840	234-254	108-114	2.2-6.2	138-148	61.6-67.6	12.8-16.8
	1	86	4.0-6.0	10	18.5-23.5	5.3-7.3	1.1	800-840	300-320	122-128	2.0-6.0	141-151	62.8-68.8	12.5-16.5
RT-VE-040	2	50	10.9-12.9	9	21.5-26.5	8.6-10.6	2.0	1230-1250	212-232	124-130	5.3-9.3	121-131	62.0-68.0	20.4-24.4
	2	59	8.1-10.1	9	21.0-26.0	9.4-11.4	2.1	1240-1280	236-256	124-130	4.1-8.1	128-138	60.5-66.5	16.0-20.4
	2	77	8.1-10.1	9	20.4-25.4	11.2-13.2	2.1	1240-1280	300-320	138-144	3.8-7.8	133-143	61.3-67.3	14.5-18.5
	2	86	8.2-10.2	9	20.0-25.0	12.3-14.3	2.1	1240-1280	338-358	148-154	5.4-9.4	135-145	61.8-67.8	14.2-18.2
	1	50	7.3-9.3	9	20.0-25.0	4.6-6.6	1.5	1030-1070	185-205	108-114	3.5-7.5	128-138	62.6-68.6	18.4-22.4
	1	59	7.6-9.6	9	20.0-25.0	5.0-7.0	1.5	1240-1280	214-234	112-118	2.4-6.4	135-145	61.7-67.7	14.1-18.1
	1	68	7.6-9.6	9	19.0-24.0	5.8-7.8	1.5	1040-1080	250-270	120-126	2.1-6.1	141-151	63.1-69.1	12.6-16.6
	1	86	6.8-8.8	9	18.6-23.6	7.3-9.3	1.5	1040-1080	313-333	139-145	2.1-6.1	144-154	63.6-69.6	12.1-16.1
RT-VE-045	2	50	9.7-11.7	10.5	18.6-23.6	10.3-12.3	2.8	1480-1520	207-227	127-133	7.3-11.3	114-124	62.8-68.8	24.5-28.5
	2	59	10.4-12.4	10.5	19.0-24.0	10.9-12.9	2.5	1410-1430	235-255	128-134	5.5-9.5	122-132	58.7-64.7	16.9-20.9
	2	77	9.6-11.6	10.5	17.8-22.8	12.9-14.9	2.6	1400-1440	297-317	141-147	3.8-7.8	127-137	59.0-65.0	14.9-18.9
	2	86	9.2-11.2	10.5	17.6-22.6	14.2-16.2	2.6	1380-1420	334-354	151-157	3.7-7.7	132-142	60.8-66.8	14.7-18.7
	1	50	7.1-9.1	10.5	18.6-23.6	5.6-7.6	1.9	1210-1250	189-209	106-112	5.6-9.6	124-134	61.3-67.3	18.5-22.5
	1	59	7.4-9.4	10.5	18.0-23.0	6.1-8.1	1.8	1150-1190	216-236	112-118	3.9-7.9	132-142	60.3-66.3	14.1-18.1
	1	68	7.3-9.3	10.5	17.6-22.6	6.9-8.9	1.9	1140-1180	244-264	117-123	3.1-7.1	133-143	59.7-65.7	13.0-17.0
	1	86	6.4-8.4	10.5	20.0-25.0	8.8-10.8	1.8	1130-1170	313-333	138-144	2.9-8.9	136-146	60.6-66.6	12.5-16.5
RT-VE-052	2	50	12.6-14.6	12	22.0-27.0	13.2-15.2	3.2	1540-1580	228-248	117-123	6.1-10.1	133-143	60.1-66.1	13.3-17.3
	2	59	12.3-14.3	12	21.3-26.3	15.9-17.9	3.0	1540-1580	252-272	126-132	5.1-9.1	133-143	59.7-65.7	13.0-17.0
	2	77	10.6-12.6	12	20.0-25.0	16.2-18.2	3.1	1550-1590	310-330	141-147	5.3-9.3	136-146	61.0-67.0	13.1-17.1
	2	86	9.6-11.6	12	19.8-24.8	17.8-19.8	3.0	1550-1590	352-372	152-158	6.8-10.8	137-147	61.4-67.4	12.9-16.9
	1	50	8.9-10.9	12	21.3-26.3	7.0-9.0	1.9	1240-1280	200-220	104-110	3.5-7.5	142-152	63.2-69.2	12.8-16.8
	1	59	8.9-10.9	12	20.2-25.2	8.0-10.0	2.0	1260-1300	226-246	114-120	2.7-6.7	140-150	61.9-67.9	12.1-16.1
	1	68	8.4-10.4	12	19.6-24.6	8.8-10.8	2.0	1260-1300	252-272	122-128	2.5-6.5	142-152	62.5-68.5	12.0-16.0
	1	86	7.2-9.2	12	18.4-23.4	11.3-13.3	2.3	1280-1320	321-341	148-154	4.0-8.0	144-154	64.9-70.9	13.1-17.1
RT-VE-062	2	50	9.1-11.1	15	21.2-26.2	15.2-17.2	4.7	1920-1960	220-240	130-136	10.4-14.4	123-133	64.5-70.5	22.3-26.3
	2	59	11.0-13.0	15	21.0-26.0	17.2-19.2	4.9	1960-2000	251-271	136-142	10.3-14.3	129-139	64.6-70.6	19.6-23.6
	2	77	10.6-12.6	15	20.5-25.5	19.5-21.5	4.8	1950-1990	313-333	147-153	8.9-12.9	132-142	61.9-67.9	15.6-19.6
	2	86	10.0-12.0	15	18.9-23.9	21.1-23.1	4.7	1950-1990	351-371	157-163	10.9-14.9	136-146	64.6-70.6	16.5-20.5
	1	50	7.6-9.6	15	21.5-26.5	9.3-11.3	3.1	1600-1640	202-222	118-124	7.2-11.2	127-137	64.2-70.2	20.2-24.2
	1	59	7.9-9.9	15	19.0-24.0	10.3-12.3	3.1	1610-1650	229-249	125-131	8.7-12.7	132-142	65.7-71.7	19.4-23.4
	1	68	8.0-10.0	15	20.0-25.0	11.2-13.2	3.1	1660-1700	256-276	128-134	8.3-12.3	138-148	63.4-69.4	14.5-18.5
	1	86	7.1-9.1	15	20.0-25.0	14.2-16.2	3.1	1590-1630	323-343	149-155	7.6-11.6	138-148	64.4-70.4	15.3-19.3

Troubleshooting – EZGEO Control

Sensor Temperature Calibration – both remote sensors are digital electronic and factory calibrated. Normally these do not require field calibration or verification. However, if sensor temperature error is determined, use special PC software disc and PC serial port cable. The PC screen has direct readout of both temperatures, allows a visual determination of WarmFlo internal temperature settings, and can be used to offset either temperature sensor for troubleshooting and demonstration purposes. This is especially valuable during summer installation.

Override, "E" Tab Input – during a normal roomstat heat call and W2 is jumpered to W, it brings on all four stages and essentially bypasses any temperature sensing or stage modulation functions. In other words, with a W2 input (still need the normal W stat input) this is simply a turn-on/turn-off device.

During a normal roomstat heat call and E-GAS is jumpered to W, it forces a standby (SB) action.

During a normal roomstat cool call and Y2 is jumpered to Y, it forces a compressor to full capacity.

SOT bypass – adding a jumper wire between J6 and Common will shorten the SOT time down to $1/30^{th}$ of the SOT set point. For example. if SOT dial is set to position 0 (30 minutes), the EZGEO control will switch to full output in one minute with the test wire in place.

Bad sensor, safety – if the internal logic detects open sensor wire, incorrectly wired sensor, or some bad sensor transmitted value conditions; the green LED reverts to a pulsing mode. Basically the appropriate sensor is set internally to a 0° value and the WarmFlo main board only allows stage 1 and stage 2 on.

- OT sensor – approximately 1/10 second blip every ½ second
- ST sensor – two, 1/10 second blips every ½ second
- Both bad – ½ second on and ½ second off, alternating

Bad sensor, operating default condition – the detection of bad sensor forces the controller to a fixed stage operation.

- ST sensor
  - Stages 1 and 2 on, stages 3 and 4 off (5 kW maximum)
  - The PC screen reads "254" or "BAD"
- OT sensor
  - Set to a default of 2° F, see Figures 1, 2, 3, 4
  - The PC screen reads "254" or "BAD"

Internal fuses – the internal desuperheater pump and the source loop pump station terminal block have internal fuses. These are located above the compressor contactor.

- The external decal provides the fuse size and details.

Troubleshooting/Repair Helps

1. This EZGEO controller contains several interference suppression components, but as an electronic logic product, unpredictable and unusual transients or interferences may sometimes cause strange results. If the EZGEO controller is "acting strange", one immediate step would be power down reset. Simply turn off the 24-volt source power (probably furnace or air handler circuit breaker), when the green LED goes out, count to 10, and re-energize power supply.
2. The terminal blocks for control wire hook-up are designed for a wire insertion and screw clamp down. If there is no wire connected and the screw is loose, the screw may not necessarily make a good electrical contact to the inside components. Example – if you are jumpering the thermostat terminals without thermostat wire connection or if you are attempting to measure voltage on the screw head, you may get erroneous or unpredictable results if the screw is not tightened down.
3. Use general heating system logic information and basic understanding of the terminal block wiring functions when measuring voltage to determine proper operation of this module.
4. The outdoor sensor must be located outdoors for this controller to correctly operate. Do not leave the outdoor sensor "hanging in conditioned space" and attempt to run this system. Note: OT sensor tip must be up.

EZGEO Bypass
Behind the front panel hinged door the various wires from the EZGEO board terminate on a Geo standard terminology terminal block. If necessary to prevent building freeze-up, etc. the wires from the EZGEO board can be disconnected from this terminal block and the room thermostat (or another heat pump type roomstat) can be transferred to this terminal block to run the compressor/heat pump in an emergency mode.

- R to Y1 – compressor on and blower at full airflow.
- RV – can be left unterminated for heating (NHP concept design is reversing valve high during cooling)
- G – not needed.
- Fault – monitored output only, not needed.

Gas furnace only option, operating mode B, C, D – with EZGEO board disconnected, roomstat can go directly to gas furnace W and appropriate blower terminals. This is assuming gas furnace has its own blower.

Front panel override switch – if mode is B, C, or D and gas furnace is active via EZGEO board with a potential compressor problem (probably fault LED on) the front panel switch in the up position will transfer the roomstat to the gas furnace. Depending upon the blower configuration, it should follow with the functioning gas furnace, but local HVAC contractor needs to verify.

Alarm/Fault Active
The status LED and alarm output continue until power-off reset. The EZGEO system will attempt to maintain room temperature or prevent freeze-up.

- Mode A – by definition, no backup, at each roomstat W cycle, compressor will retry.
- Modes B, C, D – with gas furnace standby roomstat W is transferred to gas furnace operation.
- Mode B, SW OVER = 0 – AUX EL will be active and do the heating.
- Cooling – same as mode A, each thermostat cycle will attempt a compressor.

Note: Do not repeatedly cycle the compressor and cause consecutive faults. This will result in **permanent** compressor damage and perhaps void warranty. If the Geo system goes into a fault mode, it has already made three attempts to clear the limit condition, repeated cycling of the roomstat will not do any good, it will simply cause damage. Call for service.

Backup/freeze-up – the intent of modes B, C, D with either AUX EL or gas furnace is to prevent freeze-up. If this Geo system is installed without backup (mode A) there is no secondary means of creating heat.

Correct use of mode selection – by definition modes B, C, D installation **include** gas furnace and/or AUX EL module. If the system is setup in either B, C, D and there is no gas furnace and/or AUX EL freeze-up may still occur because the roomstat is assuming a heat source which will bring up the temperature to satisfy the roomstat.

⚠ WARNING

WHEN CONFIGURED WITH A GAS FURNACE AND/OR AUX EL (MODES B, C, D) IT IS THE USER'S RESPONSIBILITY TO HAVE CIRCUIT BREAKERS TURNED ON, GAS IN THE TANK, GAS VALVES OPEN, AN OPERATIONAL GAS FURNACE, ETC. THE EZGEO CONTROLLER CANNOT DETECT "NO GAS IN THE TANK".

Overheat Plenum, Control Override
When AUX EL stages are not active, the ST sensor also controls compressor functions. This also prevents compressor and gas furnace on at the same time (mode D/refrigerant coil in plenum).

- ST > 105° F (40° C) – compressor Y2 turned off
- ST > 112° F (44.5° C) – compressor off

Operation continues to the end of heat call cycle or if ST < 100° F (38° C) the compressor Y2 will re-energize.

Compressor bypass – initial installation or special requirement to heat with AUX EL only.

Special configuration, mode B and SW OVER = 0 only.

1. Pull yellow wire at ICM Y tab.
2. Jumper stat W to W2 tab, or configure stat to 2H/1C or 2H/2C and follow wiring instructions on NH401.
3. Stat W will set blower to high, AUX EL steps on to full (may take time between stages, especially first time on) but no compressor.
4. Return to normal (stat off when re-wiring) – remove W to W2 and replace yellow wire at ICM Y tab.

Troubleshooting – General

Troubleshooting Guide for Water-to-Air Geo "Heating"

	Head pressure	Subcool	Suction pressure	Superheat	Compressor Amp Draw	Air temp differential	Source temp differential
Undercharged system	Low	Low	Low	High	Low	Low	Low
Overcharged system	High	High	High	Low	High	High	High
Low air flow	High	Low	High	High	High	High	Low
High air flow	Low	Low	High	High	High	Low	High
Low source flow	Low	High	Low	Low	Low	Low	High
High source flow	High	Low	High	High	High	High	Low
Low return air temperature	Low	High	Low	Low	Low	High	High
High return air temperature	High	Low	High	High	High	Low	Low
Scaled source coil	Low	High	Low	Low	Low	Low	Low
Restricted filter/drier	Low	High	Low	High	Low	Low	Low
Bad TXV / No Bulb charge	Low	High	Low	High	Low	Low	Low

Troubleshooting Guide for Water-to-Air Geo "cooling"

	Head pressure	Subcool	Suction pressure	Superheat	Compressor Amp Draw	Air temp differential	Source temp differential
Undercharged system	Low	Low	Low	High	Low	Low	Low
Overcharged system	High	High	High	Low	High	Low	Low
Low air flow	Low	High	Low	Low	Low	High	Low
High air flow	Low	Low	High	High	High	Low	High
Low source flow	High	Low	High	High	High	Low	High
High source flow	Low	High	Low	Low	Low	High	Low
Low return air temperature	Low	High	Low	Low	Low	Low	Low
High return air temperature/Humidity	High	Low	High	High	High	Low	High
Scaled source coil	High	Low	High	High	High	Low	Low
Restricted filter/drier	Low	High	Low	High	Low	Low	Low
Bad TXV / No Bulb charge	Low	High	Low	High	Low	Low	Low

Preventive Maintenance

Air Filter Maintenance – The air filter in your Northern Heat Pump is designed for optimum performance and long life. However, a dirty filter will result in lower efficiency and performance. Periodically, the filter should be thoroughly pressure washed in the opposite direction of airflow. Under normal operating conditions, a monthly cleaning should be satisfactory.

Water Coil Maintenance –In closed loop systems, water coil maintenance is generally not needed. However, if a dirty installation or deterioration of the piping has caused debris to accumulate in the system, the water coil should be cleaned using standard cleaning procedures. For open loop systems installed in areas with a high mineral content, it is best to schedule regular periodic maintenance to inspect and clean the coil if necessary. Should cleaning become necessary, do so using the following standard cleaning procedures:

Chlorine Cleaning (Bacterial Growth)

1. Turn thermostat to "Off" position.
2. Connect a circulating pump to hose bibs on entering water and leaving waterside of heat exchanger.
3. Using a five-gallon pail of water add chlorine bleach mixture. The chlorine should be strong enough to kill the bacteria. Suggested initial mixture is 1 part chlorine bleach to 4 parts water.
4. Close shut off valves upstream and downstream of heat exchanger.
5. Open hose bibs to allow circulation of bleach solution.
6. Start pump and circulate solution through heat exchanger for 15 minutes to one hour. Solution should change color to indicate the chlorine is killing the bacteria and removing it from the heat exchanger.
7. Flush used solution down the drain by adding fresh water supply. Flush until leaving water is clear.
8. Repeat procedure until solution runs clear through the chlorine circulation process.
9. Flush entire heat pump system with water. This procedure can be repeated annually, semiannually, or as often as it takes to keep bacteria out of the heat exchanger, or when bacteria appears in a visual flow meter to the point the flow cannot be read.

Muriatic Acid Cleaning (<u>Difficult Scaling and Particle Buildup Problems)</u>

- Consult installer due to dangerous nature of acids.
- Iron out solutions and de-scaling products are also useful.

Condensate Drip Pan and Drain –Inspection and cleaning of the condensate drain system during the cooling season will help prevent the system from plugging up, potentially causing water damage to your structure and floor coverings. Inspect the flexible "P-trap" to make certain it remains clear of obstructions. In some areas, airborne bacteria can cause algae to grow in the drip pan. In these areas, it may be necessary to treat the drain pan with an algae inhibiting chemical, as this algae together with lint and dust could plug the drain piping.

Blower Motors – All Northern Heat Pumps are equipped with factory sealed bearing blower motors. These motors should never need additional lubrication for the life of the motor. Periodic maintenance oiling is not recommended, as excess oil will attract lint and dust.

Air Coil – In order to keep your Northern Heat pump operation at peak efficiency, the air coil should be inspected and cleaned when necessary. If the coil is excessively dirty, the coil can be cleaned with a household vacuum cleaner and a soft brush. The aluminum fins are fragile and bend easily, so take great care not to damage the fins, and remember, these fins are sharp, so take the needed safety precautions.

Accessories/Options

	Part Number
NHP GEO Alarm	R-AL-FD-1
Fuse – source loop pump, 10A	UFUSE1799
Fuse – desuperheater pump, 3A	UFUSE1796
NHP Digital 4-Wire Thermostat (pre-programmed)	5021
Internal Strip Heater	KN-*-1-Z
Open loop, freeze limit, 39° F (4° C), pipe mounted	6047
Sound vibration pad	R-PAD-2735-1
Return air filter ▪ 21-⅞ x 27-½ ▪ 28-⅞ x 27-½ ▪ 37-⅞ x 27-½	 5864 5865 5863

*5, 10, 15, AND 20 kW models available.

HELPS – EZGEO Controller

All functions and definitions will apply to all NHP models, see appropriate model or type. Use Installation Manual to determine which part of this Helps document applies.

This exclusive controller provides installer and user-friendly functions for Geo heat pump applications. It will be helpful to grasp the EZGEO concept prior to studying the mode configuration charts and sequence of events.

First, this is a list of features/functions which are an integral part of this EZGEO system.

- Geo source, **forced air** – EZGEO is standard.
- Geo source, **split** – EZGEO is standard.
- Room thermostat – conventional 4-wire or 6-wire stat required.
- Application **mode** selection – 4-position dial switch allows installer to select the mode that fits the hardware/usage configuration.
- Outdoor temperature sensing (**OT**) – determines compressor staging, auxiliary electric (when applicable) and/or switchover to gas.
- **Two-stage** compressor – sequenced by outdoor temperature (OT) and SOT timeout, see function charts – Figures 1, 2, 3, 4.
- Forced air supply temperature sensing (**ST**) – used for the "dead compressor" alarm and controls compressors if ST is too high – zone dampers, accidental gas furnace, full load to high, etc. – where AUX electric is installed (mode B only) this regulates AUX EL module based upon heating needs and comfort.
- Alarms or fault notification – front panel yellow **EL LED pulses** at two different rates.
  - After compressor control board (ICM) has sequenced through three retries.
  - Dead compressor, plenum temperature is less than set point (factory default 85° F).
- Interface and control associated with utility control receivers (**LMC or blues**).
- **Standby (SB)** – forced function by LMC, front panel switch, optional remote switch, E-GAS, alarm, or stat override timer (SOT). Also, for modes B, C, D when OT is below **SW OVER** set point.
- Dual fuel – **gas furnace with split models** (RT-SE Series), mode D.
  - This is also possible with other Geo units (two blower) but special consideration needs to be addressed for ducting, airflow arrangements, both blowers, etc. (modes B and C).

Mode dial switch – installer must determine application/configuration and set up as required.

Mode Switch	Mode	SW OVER	Configuration
A	Geo only	N/A	No AUX EL, no gas, no auto SB, but load control can interrupt compressor for cooling (not heating)
B	Geo/AUX EL	0	AUX EL (with compressor supplement or emergency), utility load control, etc.
	Geo/AUX EL/gas	Value	AUX EL, gas, auto SB, utility load control, etc. AUX EL is compressor supplement above SW OVER value, below SW OVER point gas has priority.
C	Geo/gas	Value	No AUX EL, gas furnace, auto SB, utility load control
D	Split/gas	Value	No AUX EL, gas furnace, auto SB, utility load control

SW OVER dial switch – if the OT sensor temperature is below this set point (at R to W start) the action shown on the appropriate Figures 2, 3, 4 mode sequence chart takes place. Remains to end of stat cycle. Notice – mode B has two conditions, correct position of SW OVER is very important.

- If configured with AUX EL only (no gas), must set to 0 position.
- If no gas is connected or operational and SW OVER is set in a non-0 position, cold air only could result because the stat W cannot be satisfied without a heating source.

Heat/cool sequence – reference the Figures 1, 2, 3, 4 function sequence charts. These are selected or used based upon the application or setup mode (mode dial switch, back of EZGEO board, see above). Added information for the column headings:

- **Stats** – represents the 4-wire stat W (heat) or Y (cool) call, or 6-wire W, W2 (heat) or Y1, Y2 (cool).
- **OT** – the range or outside temperature window for the various staging functions. This is checked at W heat call and a second time at 10 minutes.
- **SOT** – the stat override timer, represents the run time following the stat call. Timing begins at W or Y high and at the timing end a specific action results.
- **SB** – standby, interrupts all electric source or energy heating (compressor and AUX EL), converts or transfers the stat W function to gas/oil as shown on the sequence charts. The return action from the listed initiating standby functions is different.
  - SOT, SW OVER, OT chart line – continue to the end of stat W heat call
  - Alarm – continues until power off reset
  - LMC, SW OVER, E-gas (heating) – when function ends, clears SB, back to appropriate sequence chart line (as if there is a new W call), SOT is reset
  - LMC, override switch (cooling) – clears with end of function, SOT is not reset, blower = G
- **Heat pump three staging functions**:
  - Off – compressor not running
  - Y1 – compressor contactor for run and low capacity
  - Y2 – compressor solenoid for high capacity
- **Blower, ECM type** – the nominal speed or CFM related to each specific model/size is programmed into the ECM motor. These nominal CFM's are triggered or controlled by three functions.
  - G – continuous air
  - Y1 – relates to compressor part capacity
  - Y2 – relates to compressor full capacity
- **AUX EL** – when auxiliary is installed (ordered separately) and the provided cable (standard WF control/interface) is plugged into EZGEO board J1 (with a mode B only) these stages become active. The ST temperature relating to the ST-target factory default plus the front panel efficiency dial is the final determination on which stages are actually heating. When the outdoor temperature, as measured by the OT sensor, drops below the AUX EL dial setting, the auxiliary electric feature is enabled.
  - STG 1 – first 5 kW
  - STG 2-4 – the remaining connected or installed stages
- **Gas W** – the mode B, C, or D functions when the gas furnace should be running. There is an attempted safety ST < 100° F sensing point and logic which initiates EZGEO reset after 30-minute gas W.
- **SW OVER** – the OT sensor is reporting a temperature value less than the SW OVER dial switch setting, switch to standby (SB) or gas.
- **Alarm** – shows the two alarm conditions and the action based upon the appropriate mode settings.
- **Status front panel yellow EL LED** – The alarm condition can be reset or cleared but the LED continues to pulse until there's actual power off and power cycled back on.
- **LMC** – load management control or utility load control function, blue wires.

Variables/factory defaults – can be changed with PC software, listed are the factory default values.

	Default
ST-target temp	90°
Dead compressor ST	70°
OT temp, heating (part load) – OT >	20°
OT temp, cooling (full load) – OT >	80°

Efficiency dial, front panel – this is a "boost" temperature function to the setup ST-target temp.

- 0 = normal = download value
- 1 = A = download value + 5
- 2 = B = download value + 10
- 3 through 7 are programmed the same as normal

Overheat plenum, control override – when AUX EL stages are not active, the ST sensor also controls compressor functions. This also prevents compressor and gas furnace on at the same time (mode D/refrigerant coil in plenum).

- ST > 105° F (40° C) – compressor Y2 turned off
- ST > 112° F (42° C) – compressor off

Operation continues to the end of heat call cycle or if ST < 100° F compressor Y2 will re-energize.

Front panel LED – see installation manual Observation Indicators section for detail.

SOT time dial switch – this is a 4-position rotary switch which begins counting time with each stat W (heat) or each stat Y (cool) input. Depending upon the dial switch setting (chart in installation manual, Field Setup section) action results after the selected minutes have elapsed. Figures 1, 2, 3, 4 charts provide this sequencing information.

- Heating – at the end of LMC or SB, the SOT start time is reset to 0.
- Cooling – at the end of LMC, the SOT start time is not reset, as the SOT times out the system will go to compressor full capacity.

ECM blower motor – this controller provides three outputs which coincide with G and heat pump stage Y1 and Y2. Whenever the AUX EL (mode B) is activated the blower is Y2 speed. However, the furnace TB outputs only apply to mode D (split) because the blower is external. For the configurations where the blower is within the Geo cabinet, the blower speeds are directly tied (hardware) to compressor Y1 and Y2.

- The actual blower size, programming, and CFM output relate to the specific Geo HP model.

AUX EL (KN-) electric heat module** – can only apply to mode B (concerning mode D, there is consideration for electric furnace, Electro-Mate with gas furnace, etc. but this is not documented). Also must be strip heat module or WarmFlo compatible with this EZGEO J1 cable.

1. Applies to mode B only.
2. Setup determines an "ST-target temp" which is similar to DT related with EZ-Mate or EB-A type temperature set point. The operating set point is ST-target plus front dial boost selection.
3. This ST-target temp can be increased with the front dial boost setting, see page 1.
4. When the attached mode B sequence chart has checkmarks in STG1, stage 1 only is active and operates at ST-target temp and boost.
5. When the mode B sequence chart has checkmarks in STG2-4, all stages operate at ST-target temp and boost.

Note: This supplement electric module can only operate with the heat pump/compressor Y1 or Y2 functions. Because the blower is hardware connected to the HP-Y1 and HP-Y2 terminal block, the compressor must be active. If there is a hardware configuration arrangement where heating is needed below compressor **plus** AUX EL, that configuration must include a gas (or fossil fuel) furnace which is activated by SW OVER. However, under special short term installation conditions, if there is a desire to run AUX only (without compressor) the yellow wire at the ICM board Y tab can be disconnected.

Special LMC comment – with mode B and hardware configuration of all three heat sources, LMC causes auto SB/gas and gas continues to the end of SB. SB can happen in addition to LMC (see page 1 center). However, SB to gas has priority over Geo/AUX EL. W2 activates full AUX EL.

Alarms – EZGEO board has two functions, the Figures 1, 2, 3, 4 sequence charts provide the action when either of these alarms is active.

- **Fault** is the output of the Geo unit internal ICM board indicating there has been three consecutive limit or flow switch failures. The ICM board holds off the compressor until there is a power off reset. Where standby gas or AUX EL exist (B, C, D) heating will continue with the roomstat W.
- **ST < 70° F** is a setup value referred to as dead compressor ST. 10 minutes after each new roomstat W ST is monitored. If ST ever falls below the setup value a 30-minute timer is started (because there may also be an ICM board fault coincident with this). At the end of the 30 minutes if ST is still less than the setup value the unit switches to standby. The system remains in standby to the completion of stat W. Note: This only applies when there is no AUX EL active.

Mode A – NHP Geo, Function Sequence, Figure 1

	STAT	OT	SOT		SB	Heat Pump			Blower			AUX EL		Gas W	SW OVER	Alarm	EL LED
			Start	End		Off	Y1	Y2	G	Y1	Y2	STG 1	STG 2-4				
1	W	> 20	✓				✓		✓	+					N/A		✓
2	W			✓			✓	✓	✓	+	+						✓
3	W	< 20	✓				✓	✓	✓	+	+						✓
4	W			✓			✓	✓	✓	+	+						✓
5																	
6	W					Fault	✓		T	+						Fault	P
7	W					✓			T							ST <	P
8																	
9																	
10																	
11																	
12																	
13	Y	< 90	✓				✓		✓	+							✓
14	Y			✓			✓	✓	✓	+	+						✓
15	Y	> 90	✓				✓	✓	✓	+	+						✓
16	Y			✓			✓	✓	✓	+	+						✓
17	Y				LMC	✓			T								Off
18	Y					Fault	✓	✓	✓	+	+					Fault	P
19	Y2						✓	✓	✓	+	+						✓

✓ = EZGEO internal action or on
+ = Hardware within Geo unit (BL Y1 and Y2, not G)
T = T-stat can do "FAN ON" G
LMC = Utility receiver, on-peak

Mode B – NHP Geo, Function Sequence, Figure 2

	STAT	OT	SOT		SB	Heat Pump			Blower			AUX EL		Gas W	SW OVER	Alarm	EL LED
			Start	End		Off	Y1	Y2	G	Y1	Y2	STG 1	STG 2-4				
1	W	> 20	✓				✓		✓	+							✓
2	W			✓			✓	✓	✓	+	+						✓
3	W	< 20	✓				✓	✓	✓	+	+						✓
4	W	< AUX EL	✓				✓	✓	✓	+	+	✓			Ø		✓
5	W			✓			✓	✓	✓	+	+	✓	✓		Ø		✓
6	W			✓	✓	✓			T					✓	✓		Off
7																	
8	W				LMC	✓			T					✓			Off
9	W					Fault	✓	✓	✓	+	+	✓	✓		Ø	Fault	P
10					✓	Fault	✓		✓	+				✓	✓	Fault	P
11	W					✓			✓	✓	✓	✓	✓			< 70	P
12	W2						✓	✓	✓	+	+	✓	✓				✓
13																	
14	Y	< 90	✓				✓		✓	+							✓
15	Y			✓			✓	✓	✓	+	+						✓
16	Y	> 90	✓				✓	✓	✓	+	+						✓
17	Y			✓			✓	✓	✓	+	+						✓
18	Y				LMC	✓			T								Off
19	Y						✓	✓	✓	+	+					Fault	P
20	Y2						✓	✓	✓	+	+						✓

✓ = EZGEO internal action or on
+ = Hardware within Geo unit (BL Y1 and Y2, not G)
T = T-stat can do "FAN ON" G
X = Not used, ST has AUX EL temp.
LMC = Utility receiver, on-peak
Line 6/7 and 10/11 are OR, depending upon SW OVER setting
SW OVER ✓ means non-Ø setting, OT > setting no action, OT < setting the action shown in the appropriate line
AUX EL = Standby Heat (onboard dial selection – 0 = disable, 1 = -30° F, 2 = -20° F, 3 = -10° F, 4 = 0° F, 5 = 5° F, 6 = 10° F, 7 = Always enable)

Mode C – NHP Geo, Function Sequence, Figure 3

	STAT	OT	SOT		SB	Heat Pump			Blower			AUX EL		Gas W	SW OVER	Alarm	EL LED
			Start	End		Off	Y1	Y2	G	Y1	Y2	STG 1	STG 2-4				
1	W	> 20	✓				✓		✓	+							✓
2	W			✓			✓	✓	✓	+	+						✓
3	W	< 20	✓				✓	✓	✓	+	+						✓
4	W	< AUX EL	✓				✓	✓	✓	+	+						✓
5	W			✓	✓	✓			T					✓			Off
6																	
7	W				✓	✓			T					✓	✓		Off
8	W				LMC	✓			T					✓			Off
9	W				✓	Fault	✓		✓	+				✓		Fault	P
10	W				✓	✓								✓		< 70	P
11																	
12																	
13																	
14	Y	< 90	✓				✓		✓	+							✓
15	Y			✓			✓	✓	✓	+	+						✓
16	Y	> 90	✓				✓	✓	✓	+	+						✓
17	Y			✓			✓	✓	✓	+	+						✓
18	Y				LMC	✓			T								Off
19	Y					Fault	✓	✓	✓	+	+					Fault	P
20	Y2						✓	✓	✓	+	+						✓

✓ = EZGEO internal action or on
+ = Hardware within Geo unit (BL Y1 and Y2, not G)
T = T-stat can do "FAN ON" G
LMC = Utility receiver, on-peak
AUX EL = Standby Heat (onboard dial selection – 0 = disable, 1 = -30° F, 2 = -20° F, 3 = -10° F, 4 = 0° F, 5 = 5° F, 6 = 10° F, 7 = Always enable)

Mode D – NHP Geo, Function Sequence, Figure 4

	STAT	OT	SOT		SB	Heat Pump			Blower			AUX EL		Gas W	SW OVER	Alarm	EL LED
			Start	End		Off	Y1	Y2	G	Y1	Y2	STG 1	STG 2-4				
1	W	> 20	✓				✓		✓	✓							✓
2	W			✓			✓	✓	✓	✓	✓						✓
3	W	< 20	✓				✓	✓	✓	✓	✓						✓
4	W	< AUX EL	✓				✓	✓	✓	✓	✓						✓
5	W			✓	✓	✓			T					✓			Off
6																	
7	W				✓	✓			T					✓	✓		Off
8	W				LMC	✓			T					✓			Off
9	W				✓	Fault	✓		T	+				✓		Fault	P
10																	
11																	
12																	
13																	
14	Y	< 90	✓				✓		✓	✓							✓
15	Y			✓			✓	✓	✓	✓	✓						✓
16	Y	> 90	✓				✓	✓	✓	✓	✓						✓
17	Y			✓			✓	✓	✓	✓	✓						✓
18	Y				LMC	✓			✓	✓							Off
19	Y					Fault	✓	✓	✓	✓	✓					Fault	P
20	Y2						✓	✓	✓	✓	✓						✓

✓ = EZGEO internal action or on
+ = Hardware within Geo unit (BL Y1 and Y2, not G)
T = T-stat can do "FAN ON"
LMC = Utility receiver, on-peak
AUX EL = Standby Heat (onboard dial selection – 0 = disable, 1 = -30° F, 2 = -20° F, 3 = -10° F, 4 = 0° F, 5 = 5° F, 6 = 10° F, 7 = Always enable)

PACKAGED UNIT R(A,T)-(H,V)E SERIES HOOKUP
CONVENTIONAL, 1H/1C, FOUR WIRE

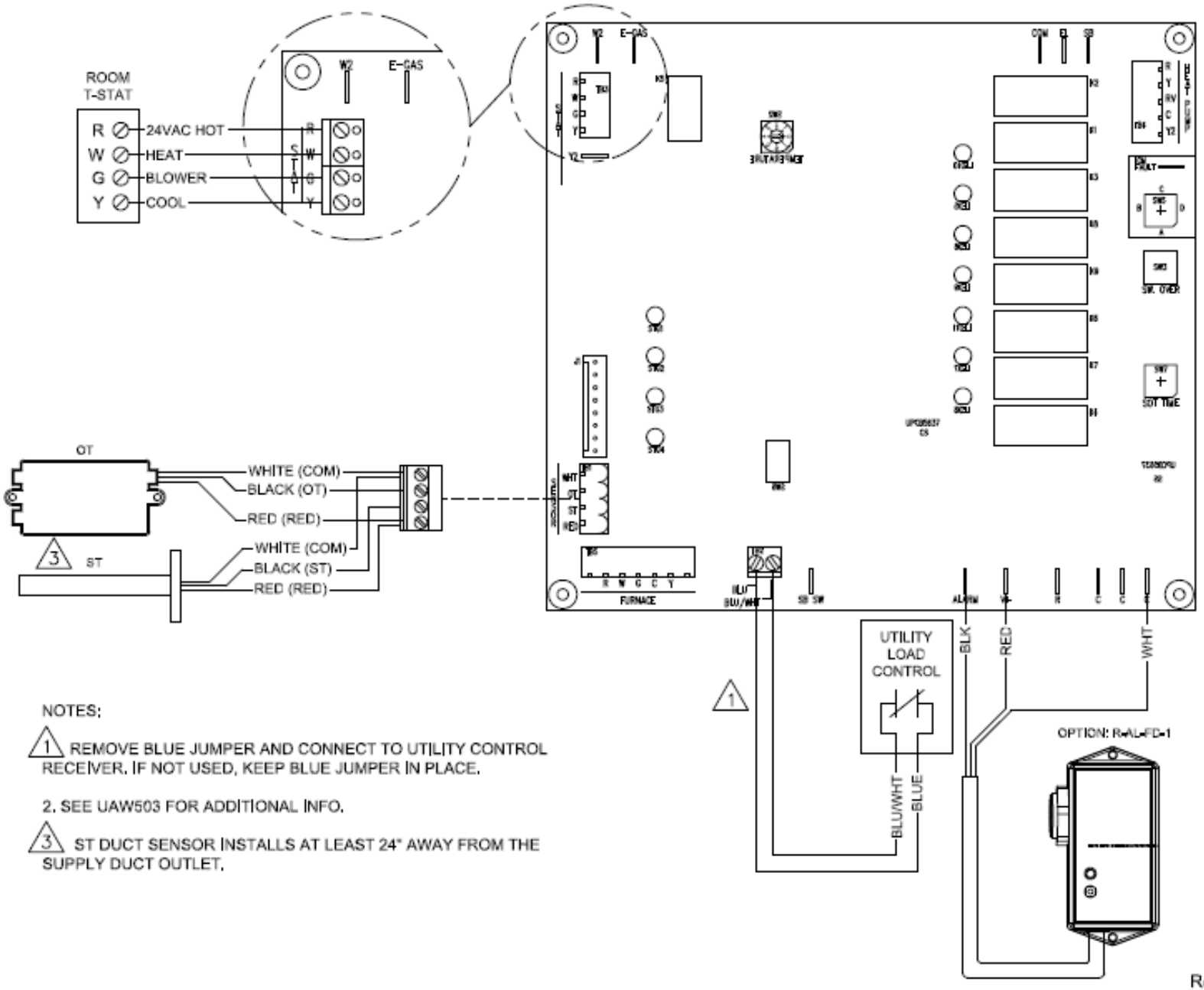

NOTES:

1. REMOVE BLUE JUMPER AND CONNECT TO UTILITY CONTROL RECEIVER. IF NOT USED, KEEP BLUE JUMPER IN PLACE.

2. SEE UAW503 FOR ADDITIONAL INFO.

3. ST DUCT SENSOR INSTALLS AT LEAST 24" AWAY FROM THE SUPPLY DUCT OUTLET.

NH401 P1
Rev.07 7-16-2014

PACKAGED UNIT R(A,T)-(H,V)E SERIES HOOKUP
CONVENTIONAL, 2H/1C, SIX WIRE

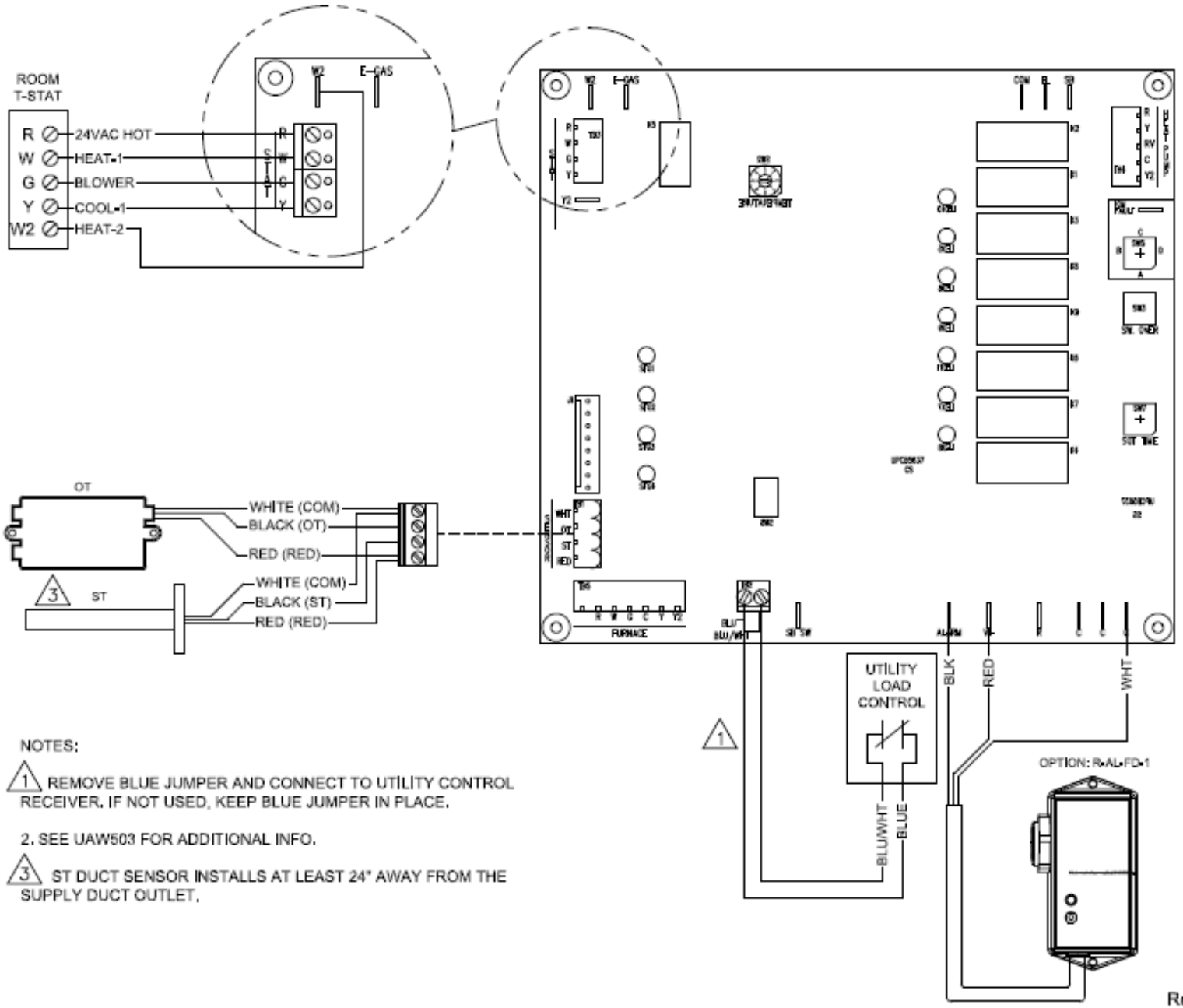

NOTES:

1. REMOVE BLUE JUMPER AND CONNECT TO UTILITY CONTROL RECEIVER. IF NOT USED, KEEP BLUE JUMPER IN PLACE.

2. SEE UAW503 FOR ADDITIONAL INFO.

3. ST DUCT SENSOR INSTALLS AT LEAST 24" AWAY FROM THE SUPPLY DUCT OUTLET.

NH401 P2
Rev.07 7-16-2014

NORTHERN HEAT PUMP
WATER-TO-AIR
- HEATING MODE

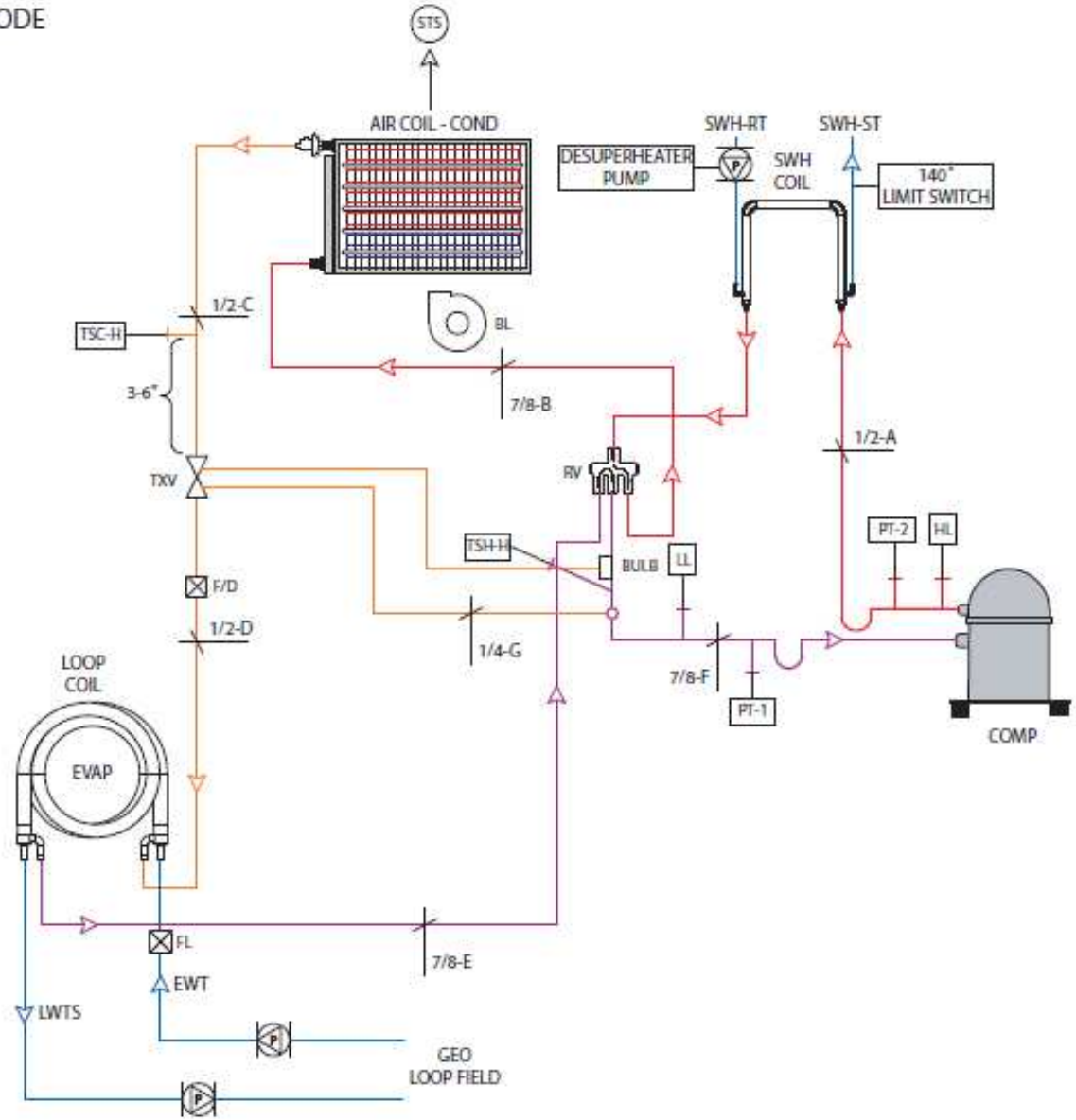

Name	
COMP	Compressor
HL	Pressure high limit
LL	Pressure low limit
PT	Pressure test port
SWH COIL	Supplementary heat exchanger
SWH-ST	Ref: WH supply
SWH-RT	Ref: WH return
RV	Reversing valve
AIR COIL	Air heat exchanger
BL	Ref: Blower
TXV	Expansion valve
F/D	Filter/dryer
LOOP COIL	Source heat exchanger
FL	Flow switch
EWT	Loop entering
LWTS	Source leaving water temperature sensor
P	Ref: Pump
TSH-C	Temperature test point - superheat cooling
TSH-H	Temperature test point - superheat heating
TSC-C	Temperature test point - subcool cooling
TSC-H	Temperature test point - subcool heating
STS	Supply temperature sensor

NORTHERN HEATPUMP

NI402 P1
Rev. B 04-26-2013

NORTHERN HEAT PUMP
WATER-TO-AIR
- COOLING MODE

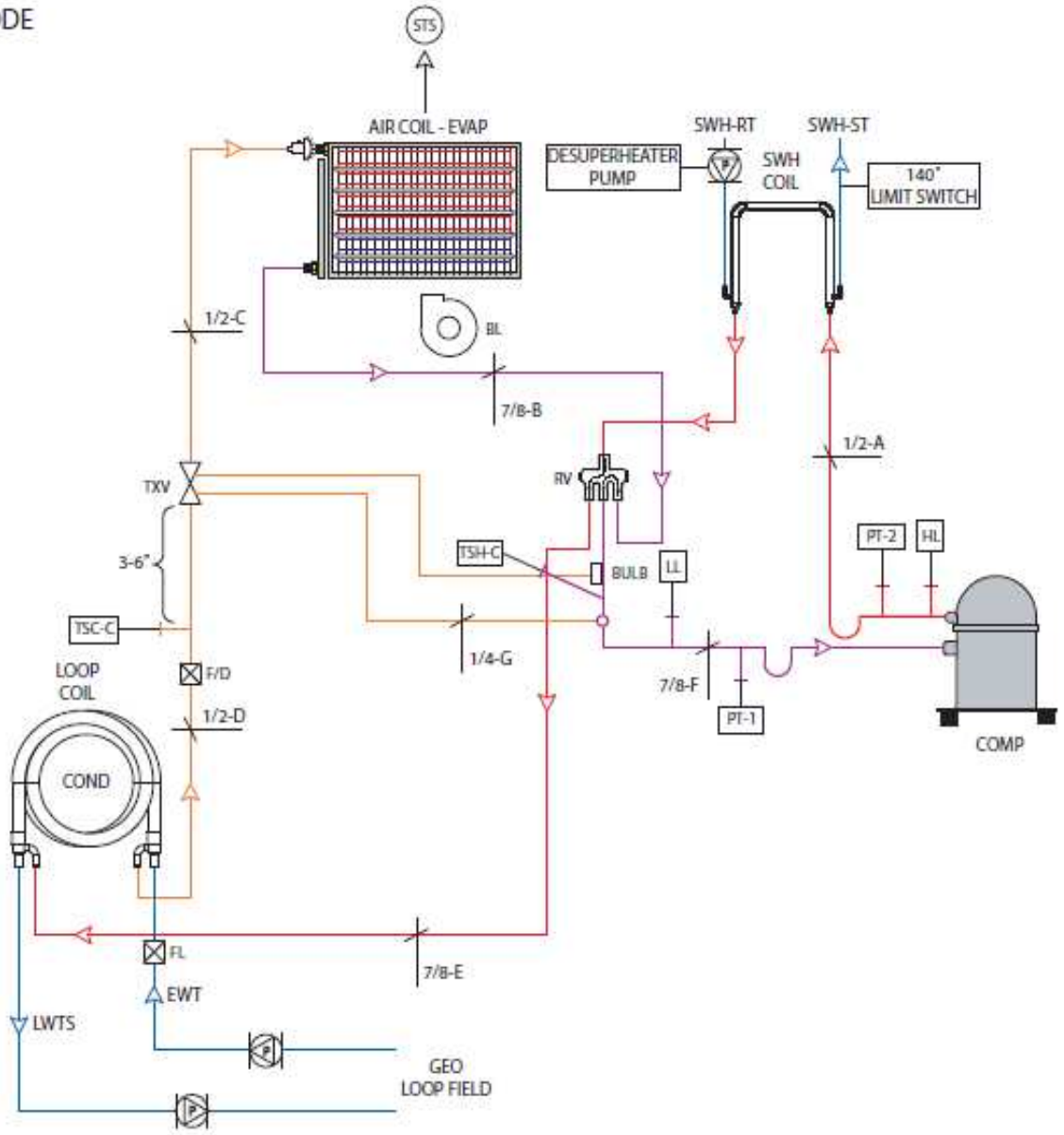

Name	
COMP	Compressor
HL	Pressure high limit
LL	Pressure low limit
PT	Pressure test port
SWH COIL	Supplementary heat exchanger
SWH-ST	Ref: WH supply
SWH-RT	Ref: WH return
RV	Reversing valve
AIR COIL	Air heat exchanger
BL	Ref: Blower
TXV	Expansion valve
F/D	Filter/dryer
LOOP COIL	Source heat exchanger
FL	Flow switch
EWT	Loop entering
LWTS	Source leaving water temperature sensor
P	Ref: Pump
TSH-C	Temperature test point - superheat cooling
TSH-H	Temperature test point - superheat heating
TSC-C	Temperature test point - subcool cooling
TSC-H	Temperature test point - subcool heating
STS	Supply temperature sensor

NORTHERN HEATPUMP

NI402 P2
Rev. B 04-26-2013

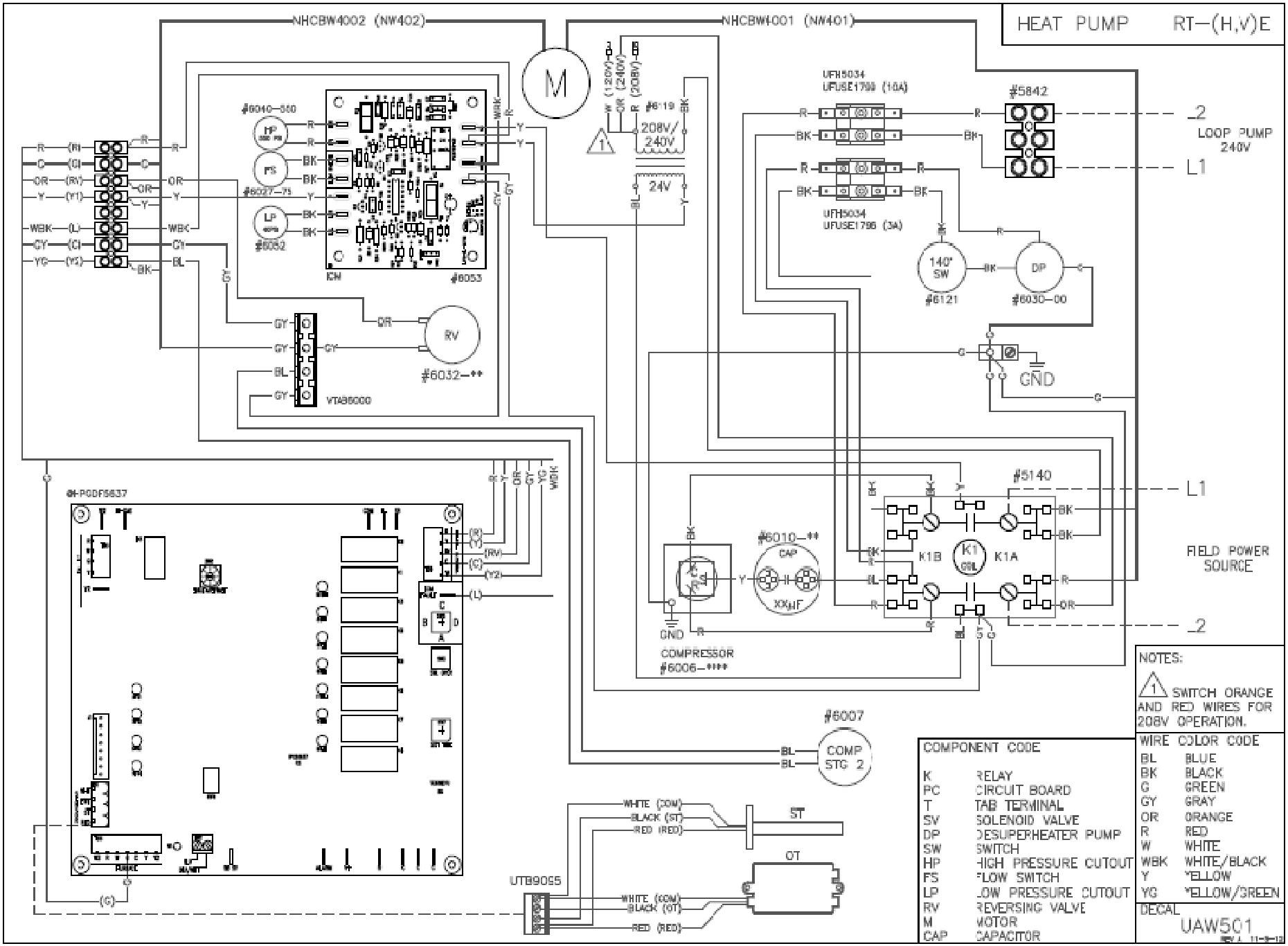
HEAT PUMP RT—(H,V)E
NHCBW4002 (NW402)
NHCBW4001 (NW401)
M
#6040—000
HP
FS
LP
#6027—75
#6052
ICM
#6053
#6119
208V/240V
24V
UFH5034
UFUSE1799 (10A)
UFH5034
UFUSE1799 (3A)
#5842
LOOP PUMP 240V
L1
_2
140° SW
#6121
DP
#6030—00
GND
RV
#6032—**
VTAB6000
#5140
K1B
K1
K1A
#6010—**
CAP
XXμF
COMPRESSOR
#6006—****
FIELD POWER SOURCE
#6007
COMP STG 2
UTB9055
WHITE (COM)
BLACK (ST)
RED (RED)
ST
OT
WHITE (COM)
BLACK (OT)
RED (RED)
NOTES:
1 SWITCH ORANGE AND RED WIRES FOR 208V OPERATION.
COMPONENT CODE
K RELAY
PC CIRCUIT BOARD
T TAB TERMINAL
SV SOLENOID VALVE
DP DESUPERHEATER PUMP
SW SWITCH
HP HIGH PRESSURE CUTOUT
FS FLOW SWITCH
LP LOW PRESSURE CUTOUT
RV REVERSING VALVE
M MOTOR
CAP CAPACITOR
WIRE COLOR CODE
BL BLUE
BK BLACK
G GREEN
GY GRAY
OR ORANGE
R RED
W WHITE
WBK WHITE/BLACK
Y YELLOW
YG YELLOW/GREEN
DECAL
UAW501

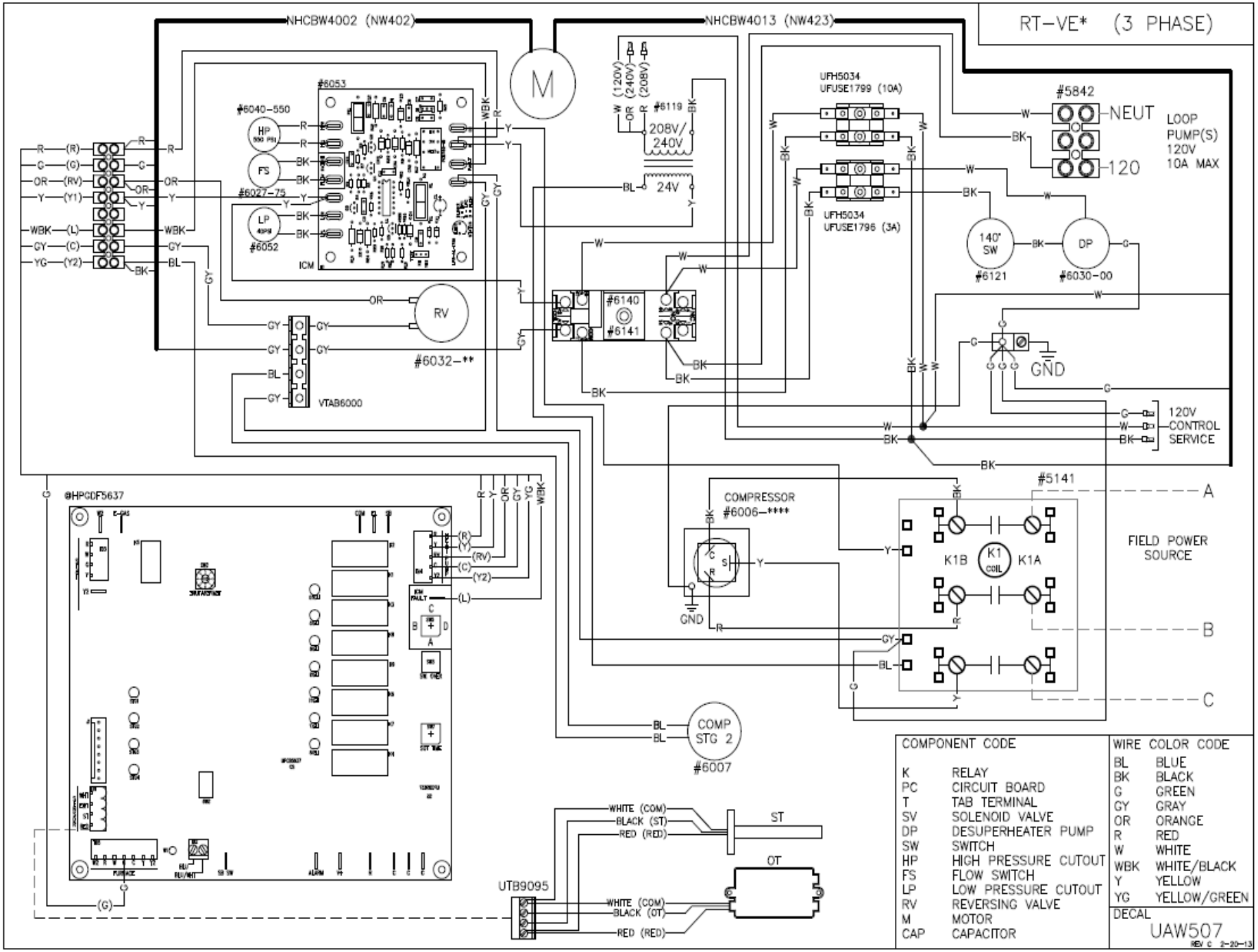
RT–VE* (3 PHASE)
NHCBW4002 (NW402)
NHCBW4013 (NW423)
#6053
#6040–550
HP
FS
#6027–75
LP
#6052
ICM
M
#6119
208V/
240V
24V
UFH5034
UFUSE1799 (10A)
UFH5034
UFUSE1795 (3A)
#5842
NEUT
120
LOOP
PUMP(S)
120V
10A MAX
140°
SW
#6121
DP
#6030–00
RV
#6032–**
VTAB6000
#6140
#6141
GND
120V
CONTROL
SERVICE
#HPGDF5637
COMPRESSOR
#6006–****
#5141
K1B
K1
COIL
K1A
FIELD POWER
SOURCE
A
B
C
COMP
STG 2
#6007
UTB9095
WHITE (COM)
BLACK (ST)
RED (RED)
ST
OT
WHITE (COM)
BLACK (OT)
RED (RED)
COMPONENT CODE
K RELAY
PC CIRCUIT BOARD
T TAB TERMINAL
SV SOLENOID VALVE
DP DESUPERHEATER PUMP
SW SWITCH
HP HIGH PRESSURE CUTOUT
FS FLOW SWITCH
LP LOW PRESSURE CUTOUT
RV REVERSING VALVE
M MOTOR
CAP CAPACITOR
WIRE COLOR CODE
BL BLUE
BK BLACK
G GREEN
GY GRAY
OR ORANGE
R RED
W WHITE
WBK WHITE/BLACK
Y YELLOW
YG YELLOW/GREEN
DECAL
UAW507
REV C 2–20–13

Northern Heat Pump™ Residential Limited Product Warranty

Effective March 2014

NORTHERN GEO warrants to the owner, at the original installation site, for a period of three (3) years from date of original purchase, that the product and product parts manufactured by NORTHERN GEO are free from manufacturing defects in materials and workmanship, when used under normal conditions and when such product has not been modified or changed in any manner after leaving the manufacturing plant. If any product or product parts manufactured by NORTHERN GEO are found to have manufacturing defects in materials or workmanship, such will be repaired or replaced by NORTHERN GEO. NORTHERN GEO shall have the opportunity to directly, or through its authorized representative, examine and inspect the alleged defective product or product parts. NORTHERN GEO may request that the materials be returned to NORTHERN GEO at owner's expense for factory inspection. The determination as to whether product or product parts shall be repaired, or in the alternative, replaced, shall be made by NORTHERN GEO or its authorized representative.

TEN YEAR (10) LIMITED WARRANTY ON REFRIGERATION COMPONENTS

NORTHERN GEO warrants that the compressor, reversing valve, expansion valve and heat exchanger(s) of its products are free from defects in materials and workmanship through the tenth year following date of original purchase. If any compressor, reversing valve, expansion valve or heat exchanger(s) are found to have a manufacturing defect in materials or workmanship, NORTHERN GEO will repair or replace them at their discretion.

LIFETIME LIMITED WARRANTY ON UNIT CABINET

NORTHERN GEO warrants that the cabinet to be free from defects in materials and workmanship for the life of the unit. If any panel fails NORTHERN GEO will repair or replace them at their discretion.

NORTHERN GEO shall cover labor costs according to the Repair / Replacement Labor Allowance Schedule for a period of three (3) years from the date of original purchase, at the original installation site on all parts excluding the compressor, reversing valve, expansion valve, and heat exchanger(s). NORTHERN GEO shall cover labor costs according to the Repair / Replacement Labor Allowance Schedule for a period of ten (10) years from the date of original purchase, at the original installation site, on parts including the compressor, reversing valve, expansion valve, and heat exchanger(s). The Repair / Replacement Labor Allowance is designed to reduce the cost of repairs. This Repair / Replacement Labor Allowance may not cover the entire labor fee charged by your dealer / contractor.

Northern Geo
Manufacturer of Geothermal Heat Pumps for the North

75 WEST VEUM

APPLETON, MN. 56208

320-297-9100

CONDITIONS AND LIMITATIONS:

1. This warranty is limited to residential, single family dwelling installations only. Any commercial or multi-unit dwelling installations fall under the NORTHERN GEO Commercial Limited Product Warranty.
2. NORTHERN GEO shall not be liable for performance related issues resulting from improper installation, improper sizing, improper duct or distribution system, or any other installation deficiencies.
3. If at the time of a request for service the owner cannot provide an original sales receipt or a warranty card registration then the warranty period for the product will have deemed to begin the date the product is shipped from the factory and **NOT** the date of original purchase.
4. The product must have been sold and installed by a licensed electrician, plumbing, or heating contractor.
5. The application and installation of the product must be in compliance with NORTHERN GEO specifications, as stated in the installation and instruction manual, and all state, provincial and federal codes and statutes. If not, the warranty will be null and void.
6. The purchaser shall have maintained the product in accordance with the manual that accompanies the unit. Annually, a qualified and licensed contractor must inspect the product to assure it is in proper working condition.
7. All related heating components must be maintained in good operating condition.
8. All lines must be checked to confirm that all condensation drains properly from the unit.
9. Replacement of a product or product part under this limited warranty does not extend the warranty term or period.
10. Replacement product parts are warranted to be free from defects in material and workmanship for ninety (90) days from the date of installation. All exclusions, conditions, and limitations expressed in this warranty apply.
11. Before warranty claims will be honored, NORTHERN GEO shall have the opportunity to directly, or through its authorized representative, examine and inspect the alleged defective product or product parts. Remedies under this warranty are limited to repairing or replacing alleged defective product or product parts. The decision whether to repair or, in the alternative, replace products or product parts shall be made by NORTHERN GEO or its authorized representative.

THIS WARRANTY DOES NOT COVER:

1. Costs for labor for diagnosis, removal or reinstallation of an alleged defective product or product part, transportation to NORTHERN GEO or its designated location, and any other materials necessary to perform the exchange, except as stated in this warranty. Replacement material will be invoiced to the distributor in the usual manner and will be subject to adjustment upon verification of defect.
2. Any product or product part that has been damaged as a result of being improperly serviced or operated, including, but not limited to, the following: operated during construction phase, with insufficient water or air flow; allowed to freeze; subjected to flood conditions; subjected to improper voltages or power supplies; operated with air flow or water conditions and/or fuels or additives which cause unusual deposits or corrosion in or on the product; chemical or galvanic erosion; improper maintenance or subject to any other abuse or negligence.
3. Any product or product part that has been damaged as a result of natural disasters, including, but not limited to, lightning, fire, earthquake, hurricanes, tornadoes or floods.
4. Any product or product part that has been damaged as a result of shipment or handling by the freight carrier. It is the receiver's responsibility to claim and process freight damage with the carrier.
5. Any product or product part that has been defaced, abused or suffered unusual wear and tear as determined by NORTHERN GEO or its authorized representative.
6. Workmanship of any installer of the product or product part. This warranty does not assume any liability of any nature for unsatisfactory performance caused by improper installation.
7. Transportation charges for any replacement product, product part or component, service calls, normal maintenance; replacement of fuses, filters, refrigerant, etc.

THESE WARRANTIES DO NOT EXTEND TO ANYONE EXCEPT THE OWNER AND ONLY WHEN THE PRODUCT IS IN THE ORIGINAL INSTALLATION SITE. THE REMEDIES SET FORTH HEREIN ARE EXCLUSIVE.

ALL IMPLIED WARRANTIES, INCLUDING WARRANTIES OF MERCHANTABILITY AND FITNESS FOR A PARTICULAR PURPOSE, ARE HEREBY DISCLAIMED WITH RESPECT TO ALL PURCHASERS OR OWNERS. NORTHERN GEO IS NOT BOUND BY PROMISES MADE BY OTHERS BEYOND THE TERMS OF THESE WARRANTIES. FAILURE TO RETURN THE WARRANTY CARD SHALL HAVE NO EFFECT ON THE DISCLAIMER OF THESE IMPLIED WARRANTIES.

ALL EXPRESS WARRANTIES SHALL BE LIMITED TO THE DURATION OF THIS EXPRESS LIMITED WARRANTIES SET FORTH HEREIN AND EXCLUDE ANY LIABILITY FOR CONSEQUENTIAL OR INCIDENTAL DAMAGES RESULTING FROM THE BREACH THEREOF. SOME STATES OR PROVINCES DO NOT ALLOW THE EXCLUSION OR LIMITATION OF INCIDENTAL OR CONSEQUENTIAL DAMAGES, SO THE ABOVE LIMITATIONS OR EXCLUSIONS MAY NOT APPLY. PRODUCTS OR PARTS OF OTHER MANUFACTURERS ATTACHED ARE SPECIFICALLY EXCLUDED FROM THE WARRANTY.

THIS WARRANTY GIVES YOU SPECIFIC LEGAL RIGHTS, AND YOU MAY HAVE OTHER RIGHTS WHICH VARY UNDER THE LAWS OF EACH STATE. IF ANY PROVISION OF THIS WARRANTY IS PROHIBITED OR INVALID UNDER APPLICABLE STATE OR PROVINCIAL LAW, THAT PROVISION SHALL BE INEFFECTIVE TO THE EXTENT OF THE PROHIBITION OR INVALIDITY WITHOUT INVALIDATING THE REMAINDER OF THE AFFECTED PROVISION OR THE OTHER PROVISIONS OF THIS WARRANTY.